Amplifier Power amplifier; AMP

MID_L_30W_8R；TW_L_15W_16R

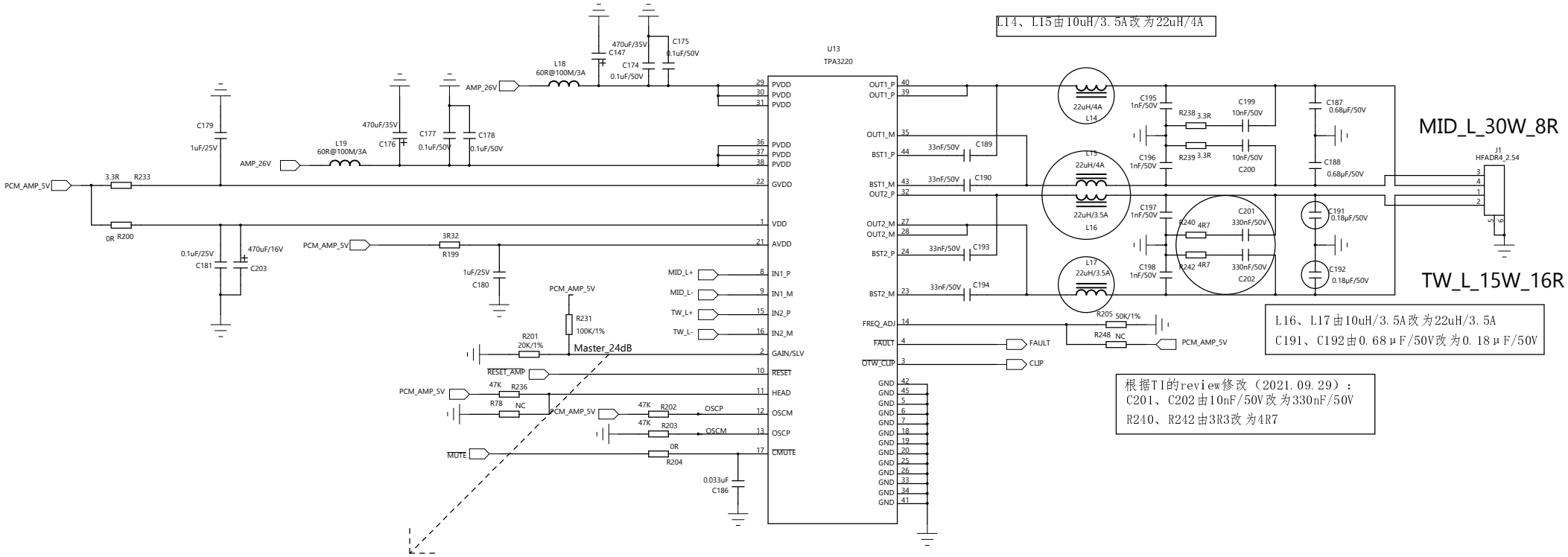

Master / Slave Mode	Gain	R1 (to GND)	R2 (to AVDD)	Differential Input Signal Level (each input pin)	Single Ended Input Signal Level
Master	18 dB	5.6 kΩ	OPEN	2 VRMS	2 VRMS
Master	24 dB	20 kΩ	100 kΩ	1 VRMS	2 VRMS
Master	30 dB	39 kΩ	100 kΩ	0.5 VRMS	1 VRMS
Master	34 dB	47 kΩ	75 kΩ	0.32 VRMS	0.63 VRMS
Slave	18 dB	51 kΩ	51 kΩ	2 VRMS	2 VRMS
Slave	24 dB	75 kΩ	47 kΩ	1 VRMS	2 VRMS
Slave	30 dB	100 kΩ	39 kΩ	0.5 VRMS	1 VRMS
Slave	34 dB	100 kΩ	16 kΩ	0.32 VRMS	0.63 VRMS

COMPANY:	Hualu			TRADEMARK FIGURE
TITLE:	Motiv XL SCH	REV:	V0.4	Hualu
DATED:	2021_10_26	CHAR PAGE	10	
DRAWING NO:		DRAWN:		

Amplifier Power amplifier; AMP

MID_R_30W_8R；TW_R_15W_16R

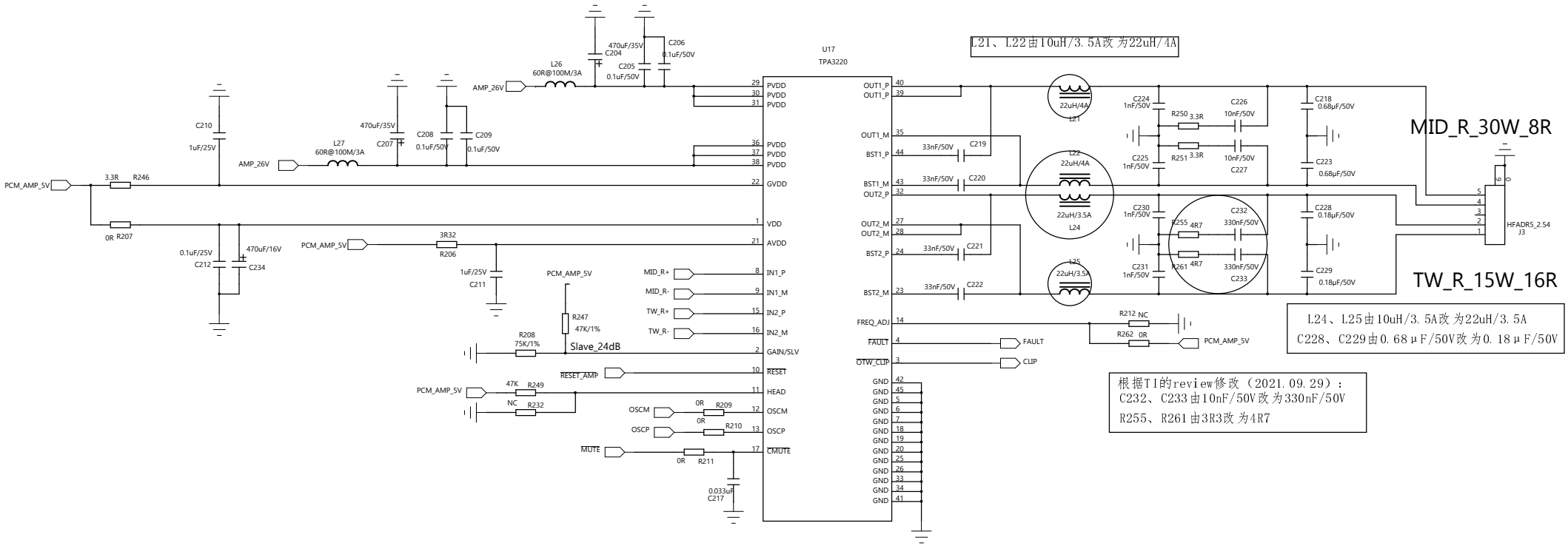

COMPANY:	Hualu		TRADEMARK FIGURE
TITLE:	Motiv XL SCH	REV:	V0.4
DATED:	2021_10_26	CHAR PAGE	11
DRAWING NO:		DRAWN:	

Hualu

Amplifier Power amplifier; AMP

SW_120W_2R

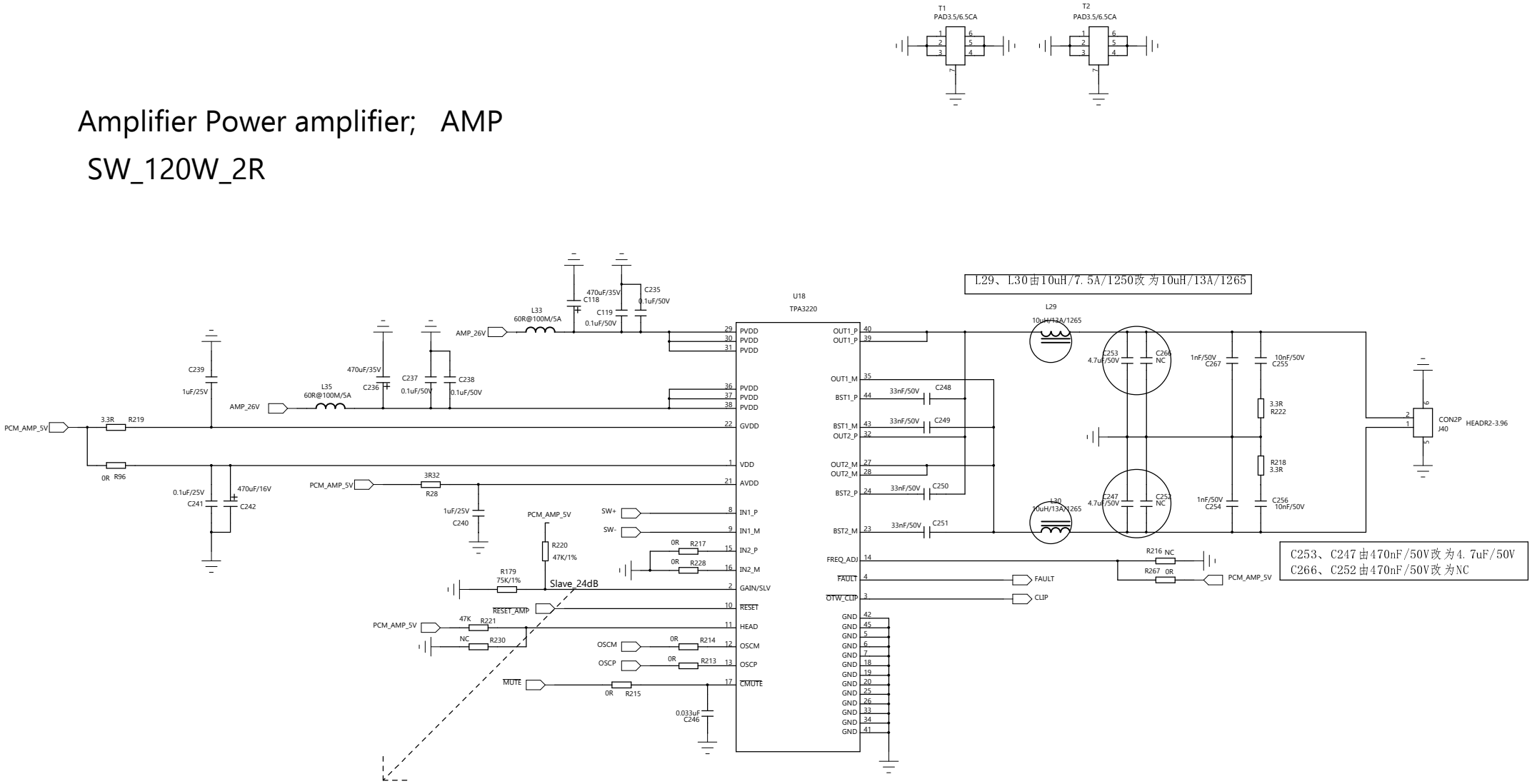

Master / Slave Mode	Gain	R1 (to GND)	R2 (to AVDD)	Differential Input Signal Level (each input pin)	Single Ended Input Signal Level
Master	18 dB	5.6 kΩ	OPEN	2 VRMS	2 VRMS
Master	24 dB	20 kΩ	100 kΩ	1 VRMS	2 VRMS
Master	30 dB	39 kΩ	100 kΩ	0.5 VRMS	1 VRMS
Master	34 dB	47 kΩ	75 kΩ	0.32 VRMS	0.63 VRMS
Slave	18 dB	51 kΩ	51 kΩ	2 VRMS	2 VRMS
Slave	24 dB	75 kΩ	47 kΩ	1 VRMS	2 VRMS
Slave	30 dB	100 kΩ	39 kΩ	0.5 VRMS	1 VRMS
Slave	34 dB	100 kΩ	16 kΩ	0.32 VRMS	0.63 VRMS

COMPANY:	Hualu			TRADEMARK FIGURE
TITLE:	Motiv XL SCH	REV:	V0.4	Hualu
DATED:	2021_10_26	CHAR PAGE	12	
DRAWING NO:		DRAWN:		