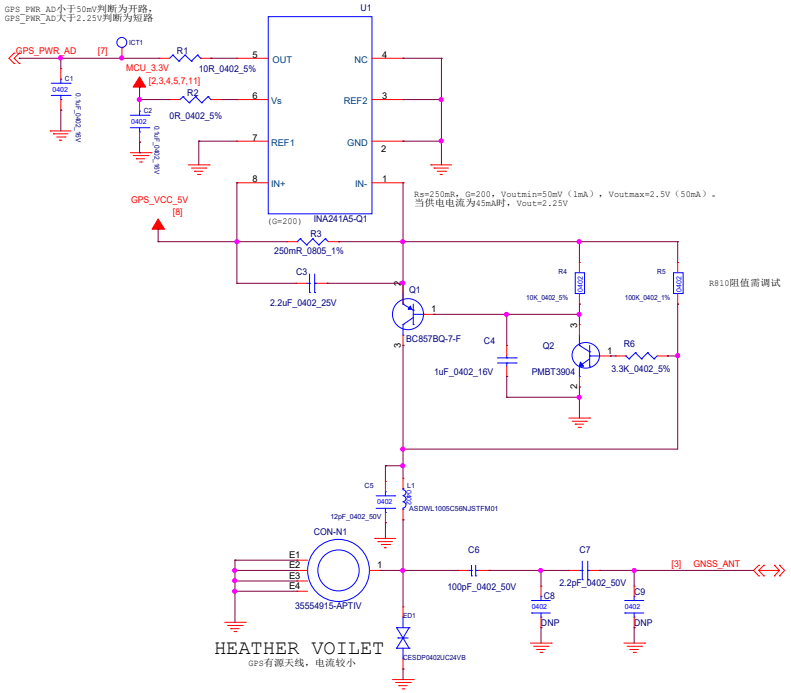

Title <Title>		
Size C	Document Number <Doc>	Rev <RevCode>
Date: Wednesday, August 02, 2023	Sheet 1 of 1	