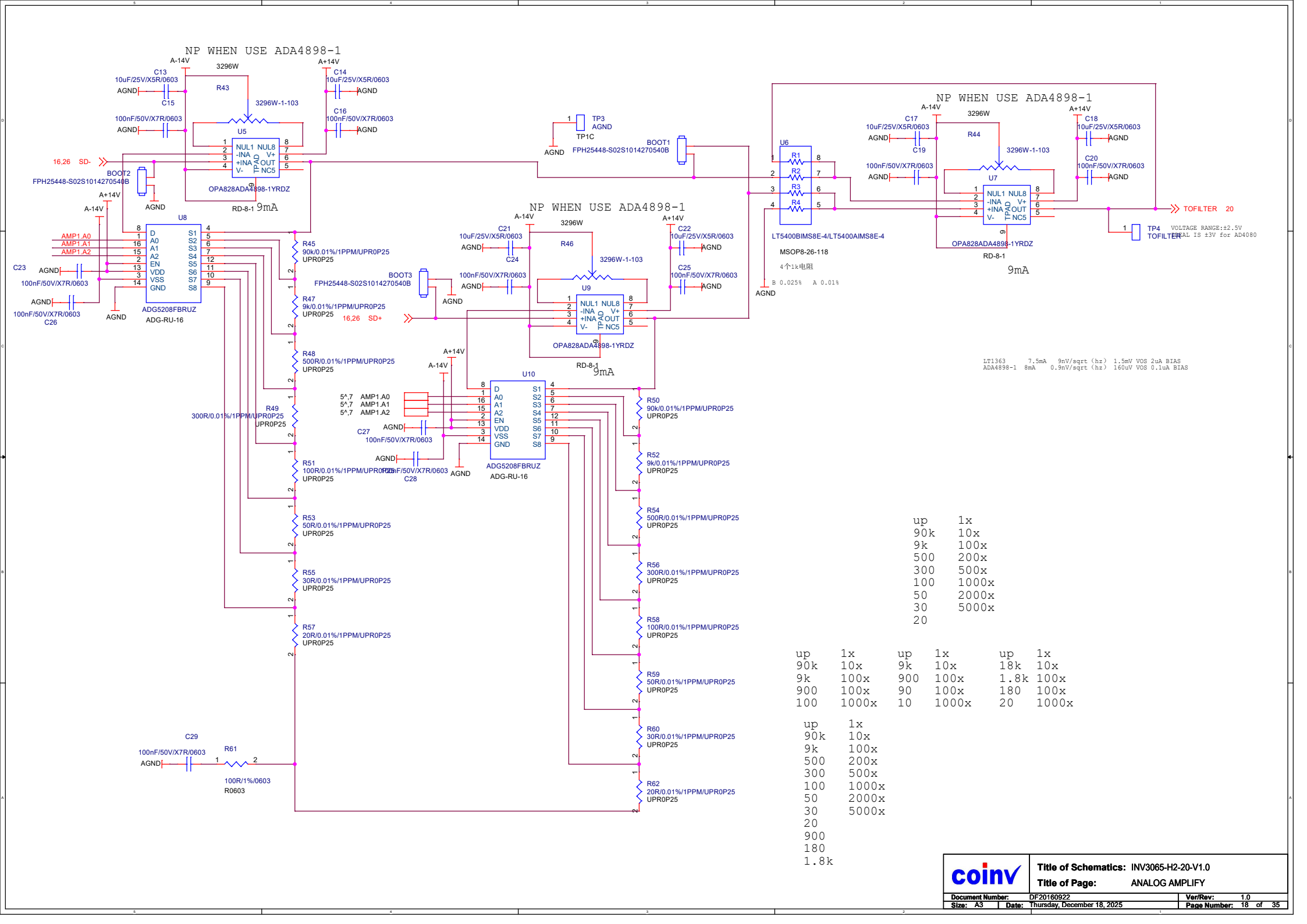
NP WHEN USE ADA4898-1
A-14V
A+14V
3296W
R43
3296W-1-103
C13
10uF/25V/X5R/0603
C14
10uF/25V/X5R/0603
C15
100nF/50V/X7R/0603
C16
100nF/50V/X7R/0603
AGND
U5
NUL1 NUL8
-INA V+
+INA OUT
V- NC5
TPAD
OPA828ADA4898-1YRDZ
RD-8-1
9mA
16,26 SD-
BOOT2
FPH25448-S02S1014270540B
TP3
TP1C
BOOT1
FPH25448-S02S1014270540B
U6
R1
R2
R3
R4
LT5400BIMS8E-4/LT5400AIMS8E-4
MSOP8-26-118
4个1k电阻
B 0.025% A 0.01%
NP WHEN USE ADA4898-1
R44
U7
C17
10uF/25V/X5R/0603
C18
10uF/25V/X5R/0603
C19
100nF/50V/X7R/0603
C20
100nF/50V/X7R/0603
TOFILTER 20
TP4
TOFILTER
VOLTAGE RANGE:±2.5V
TOTAL IS ±3V for AD4080
U8
D S1
A0 S2
A1 S3
A2 S4
EN S5
VDD S6
VSS S7
GND S8
ADG5208FBRUZ
ADG-RU-16
AMP1.A0
AMP1.A1
AMP1.A2
C23
100nF/50V/X7R/0603
C26
100nF/50V/X7R/0603
R45
90k/0.01%/1PPM/UPR0P25
R47
9k/0.01%/1PPM/UPR0P25
R48
500R/0.01%/1PPM/UPR0P25
R49
300R/0.01%/1PPM/UPR0P25
R51
100R/0.01%/1PPM/UPR0P25
R53
50R/0.01%/1PPM/UPR0P25
R55
30R/0.01%/1PPM/UPR0P25
R57
20R/0.01%/1PPM/UPR0P25
NP WHEN USE ADA4898-1
R46
U9
C21
10uF/25V/X5R/0603
C22
10uF/25V/X5R/0603
C24
100nF/50V/X7R/0603
C25
100nF/50V/X7R/0603
BOOT3
FPH25448-S02S1014270540B
16,26 SD+
OPA828ADA4898-1YRDZ
RD-8-1
9mA
U10
ADG5208FBRUZ
ADG-RU-16
5^,7 AMP1.A0
5^,7 AMP1.A1
5^,7 AMP1.A2
C27
100nF/50V/X7R/0603
C28
100nF/50V/X7R/0603
R50
90k/0.01%/1PPM/UPR0P25
R52
9k/0.01%/1PPM/UPR0P25
R54
500R/0.01%/1PPM/UPR0P25
R56
300R/0.01%/1PPM/UPR0P25
R58
100R/0.01%/1PPM/UPR0P25
R59
50R/0.01%/1PPM/UPR0P25
R60
30R/0.01%/1PPM/UPR0P25
R62
20R/0.01%/1PPM/UPR0P25
C29
100nF/50V/X7R/0603
R61
100R/1%/0603
R0603
LT1363 7.5mA 9nV/sqrt (hz) 1.5mV VOS 2uA BIAS
ADA4898-1 8mA 0.9nV/sqrt (hz) 160uV VOS 0.1uA BIAS
up 1x
90k 10x
9k 100x
500 200x
300 500x
100 1000x
50 2000x
30 5000x
20
up 1x
90k 10x
9k 100x
900 100x
100 1000x
up 1x
9k 10x
900 100x
90 100x
10 1000x
up 1x
18k 10x
1.8k 100x
180 100x
20 1000x
up 1x
90k 10x
9k 100x
500 200x
300 500x
100 1000x
50 2000x
30 5000x
20
900
180
1.8k
coinv
Title of Schematics: INV3065-H2-20-V1.0
Title of Page: ANALOG AMPLIFY
Document Number: DF20160922
Ver/Rev: 1.0
Size: A3
Date: Thursday, December 18, 2025
Page Number: 18 of 35