ADC---PART

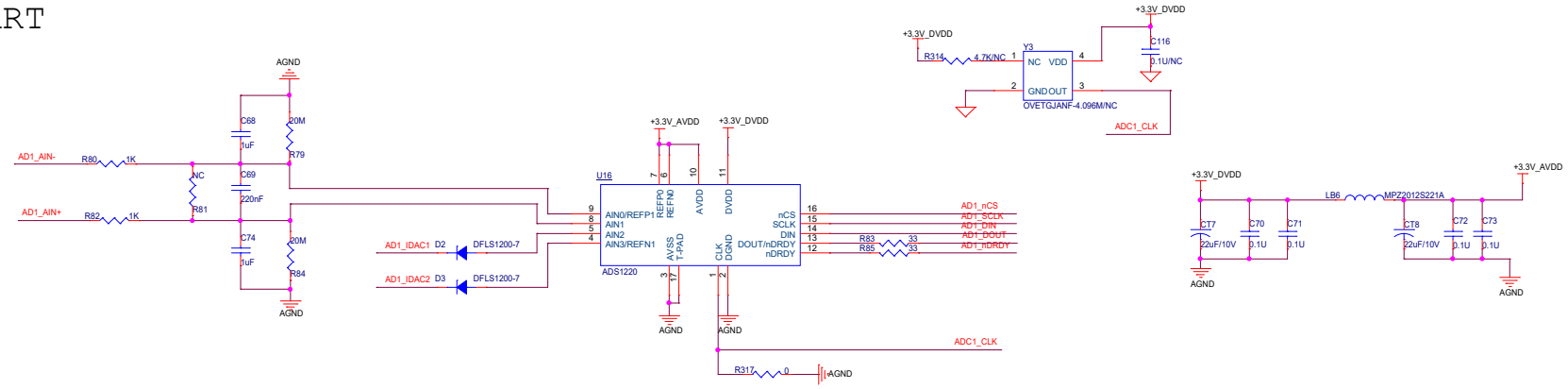

MUX---PART

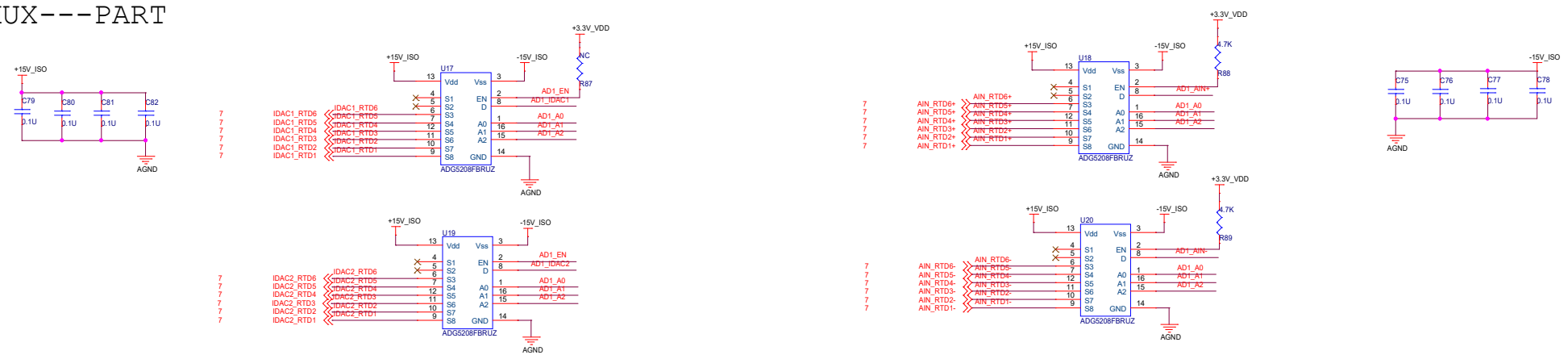

ISO---PART

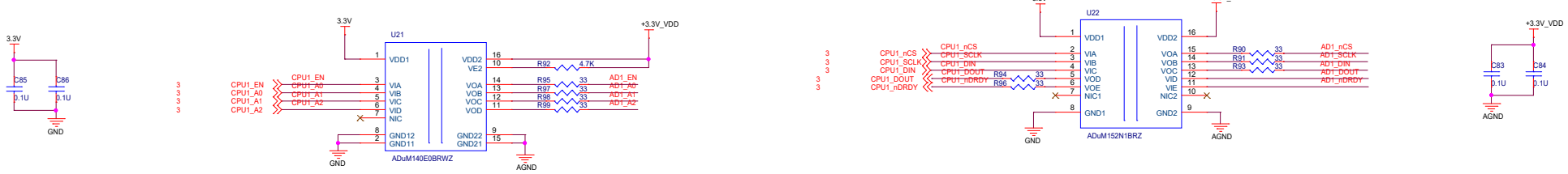

Title	ADC1&MUX1&ISO1	
Size C	Document Number <Doc>	Rev 1.0
Date: Tuesday, February 09, 2021	Sheet 5 of 19	