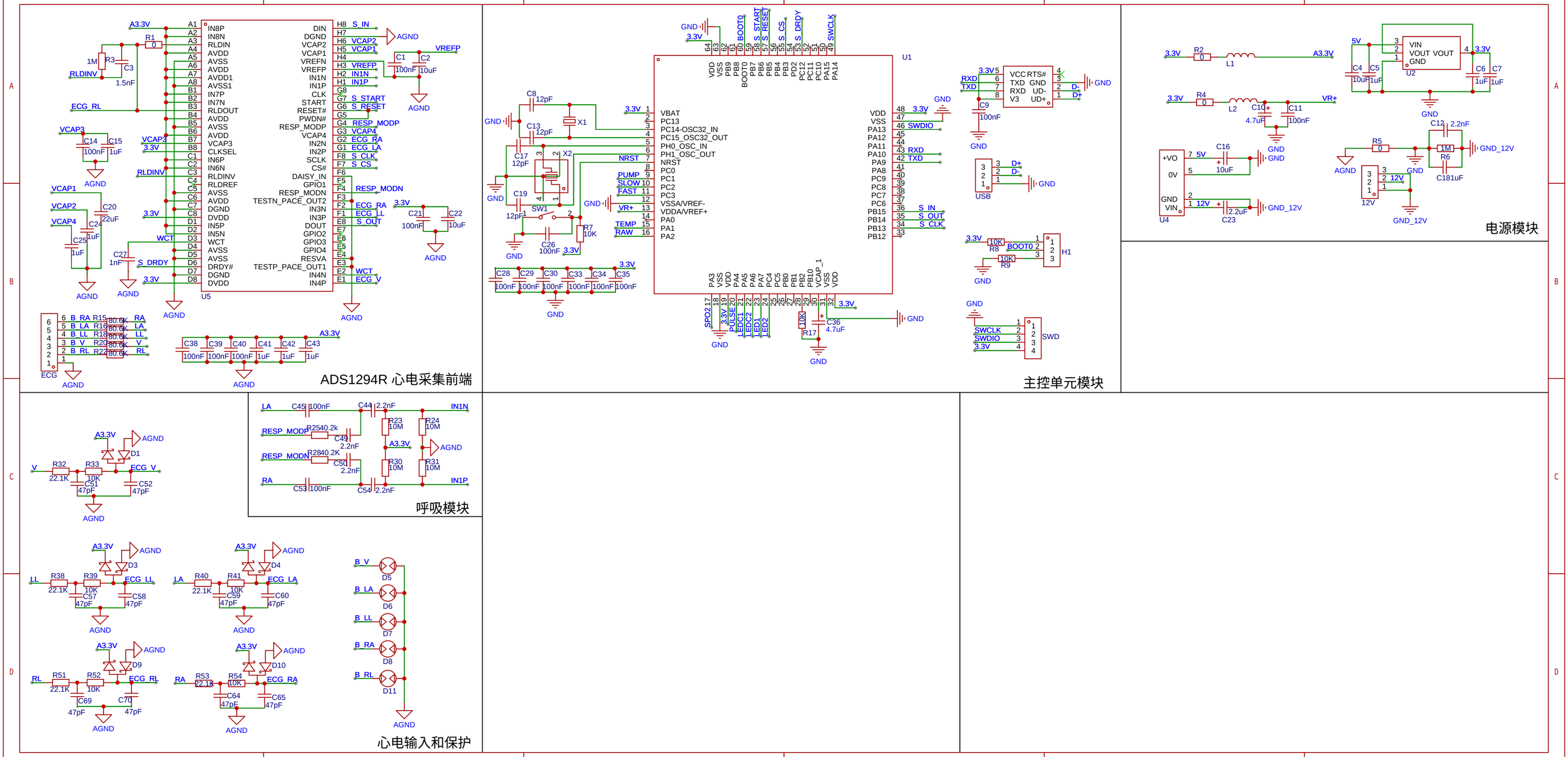
ADS1294R 心电采集前端
主控单元模块
电源模块
呼吸模块
心电输入和保护
U5
U1
U2
U4
H1
SWD
USB
ECG
AGND
GND
3.3V
A3.3V
GND_12V
VREFP
VCAP1
VCAP2
VCAP3
VCAP4
RLDINV
ECG_RL
S_IN
S_OUT
S_CLK
S_CS
S_DRDY
S_START
S_RESET
RESP_MODP
RESP_MODN
ECG_RA
ECG_LA
ECG_LL
ECG_V
WCT
NRST
PUMP
SLOW
FAST
VR+
TEMP
RAW
SWDIO
SWCLK
BOOT0
RXD
TXD
D+
D-
IN1N
IN1P
B_V
B_LA
B_LL
B_RA
B_RL
LA
LL
RA
RL
V
12V
5V