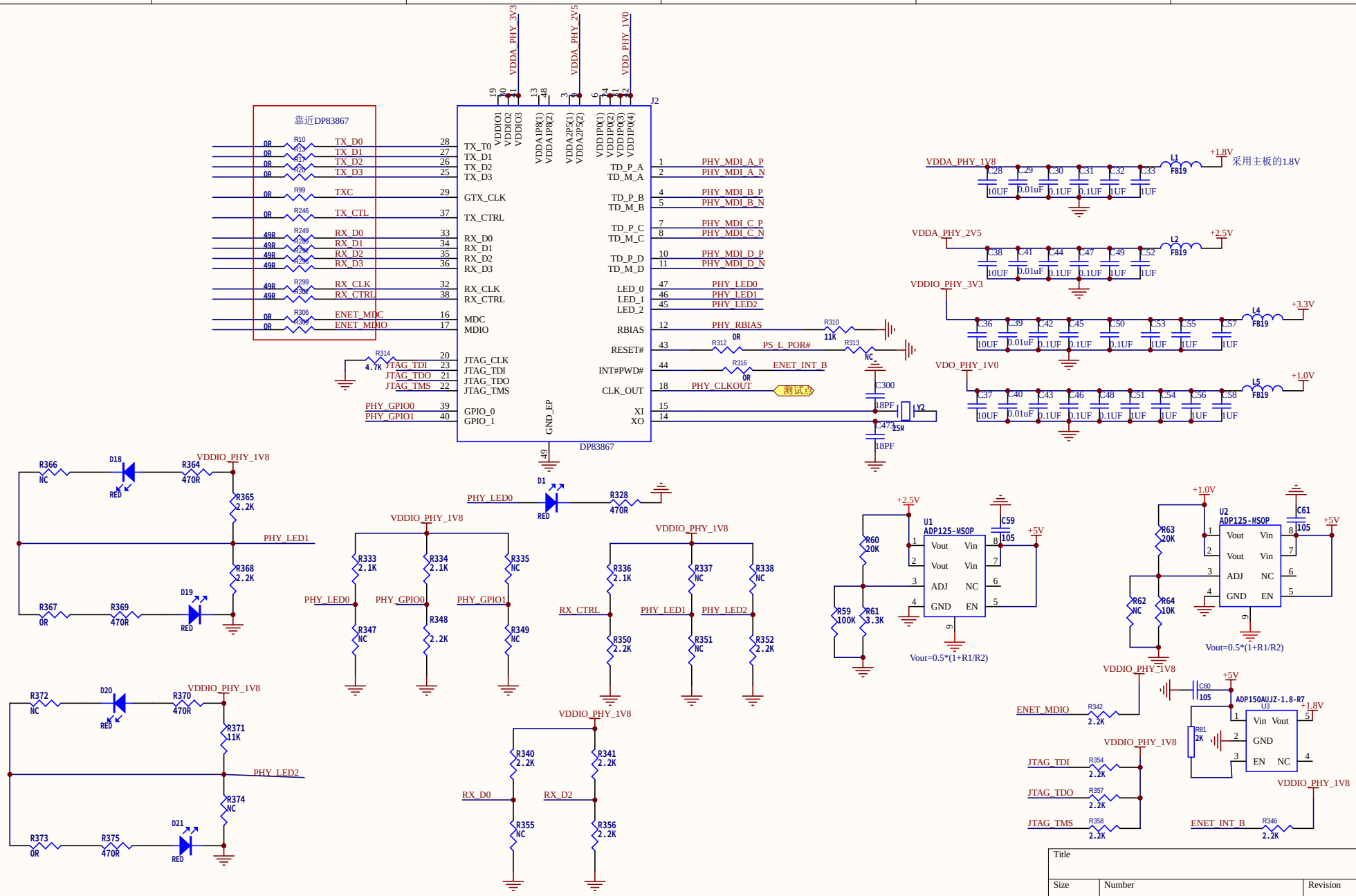
靠近DP83867
J2
DP83867
VDDA_PHY_3V3
VDDA_PHY_2V5
VDD_PHY_1V0
TX_T0
TX_D1
TX_D2
TX_D3
GTX_CLK
TX_CTRL
RX_D0
RX_D1
RX_D2
RX_D3
RX_CLK
RX_CTRL
MDC
MDIO
JTAG_CLK
JTAG_TDI
JTAG_TDO
JTAG_TMS
GPIO_0
GPIO_1
GND_EP
TD_P_A
TD_M_A
TD_P_B
TD_M_B
TD_P_C
TD_M_C
TD_P_D
TD_M_D
LED_0
LED_1
LED_2
RBIAS
RESET#
INT#PWD#
CLK_OUT
XI
XO
PHY_MDI_A_P
PHY_MDI_A_N
PHY_MDI_B_P
PHY_MDI_B_N
PHY_MDI_C_P
PHY_MDI_C_N
PHY_MDI_D_P
PHY_MDI_D_N
PHY_LED0
PHY_LED1
PHY_LED2
PHY_RBIAS
PS_L_POR#
ENET_INT_B
PHY_CLKOUT
测试点
TXC
TX_CTL
RX_CLK
ENET_MDC
ENET_MDIO
PHY_GPIO0
PHY_GPIO1
Y2
25M
VDDA_PHY_1V8
VDDA_PHY_2V5
VDDIO_PHY_3V3
VDO_PHY_1V0
采用主板的1.8V
U1
ADP125-MSOP
U2
ADP125-MSOP
Vout=0.5*(1+R1/R2)
U3
ADP150AUJZ-1.8-R7
VDDIO_PHY_1V8
RX_CTRL
RX_D0
RX_D2
JTAG_TDI
JTAG_TDO
JTAG_TMS
Title
Size
B
Number
Revision
Date: 5/08/2023
Sheet of
File: C:\Users\..\DP83867-3.Sch
Drawn By: