LVDS VIDEO OUTPUT TI-933

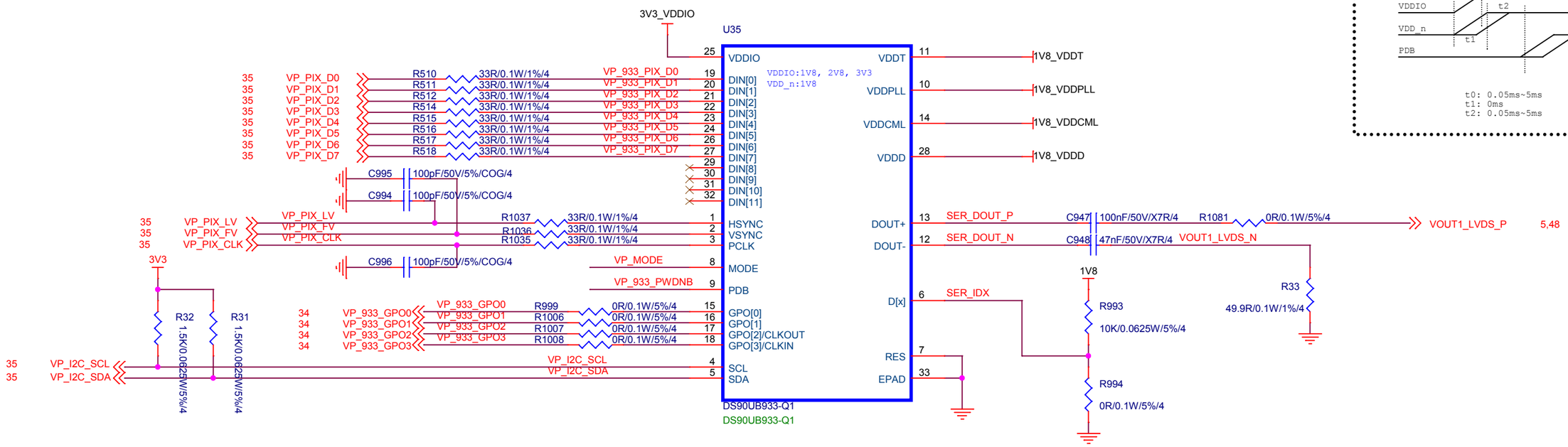

DS90UB933 Power-Up Sequencing

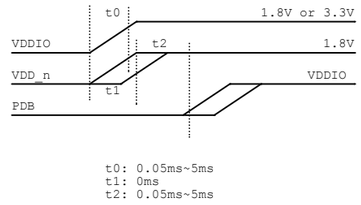

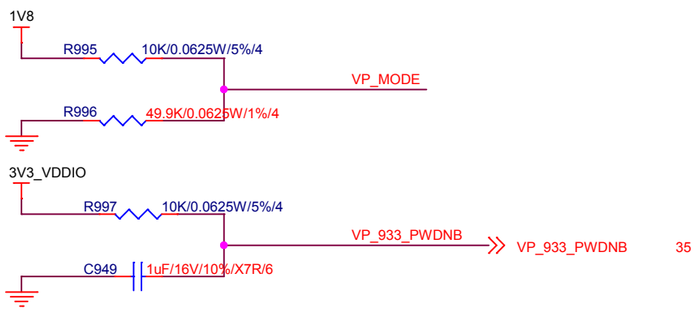

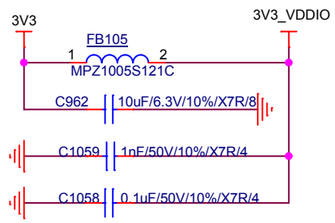

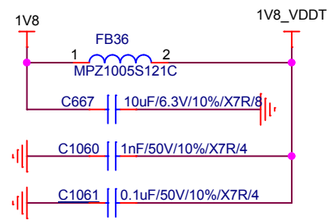

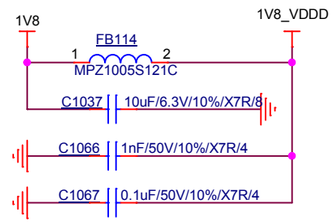

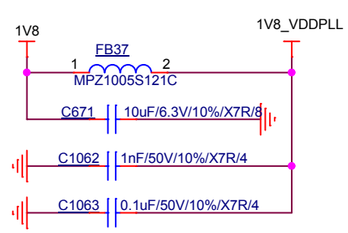

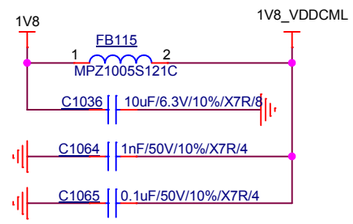

上海欧菲智能车联 film

Title	BAIC C53F HDD AVM	
Size A3	Document Number LVDS VIDEO OUTPUT TI-933	Rev V001
Date: Wednesday, March 06, 2019	Sheet 47 of 50	