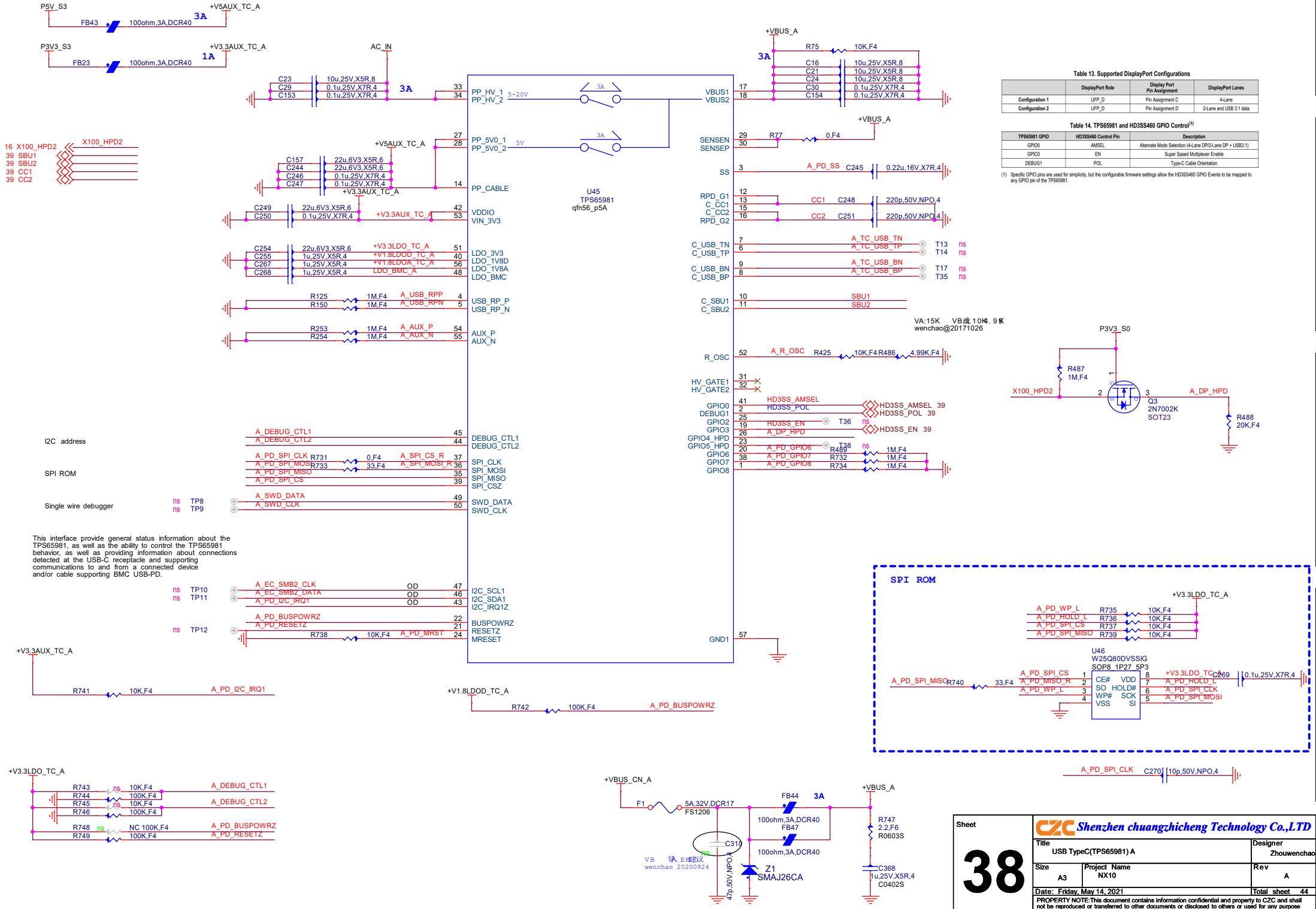

Table 13. Supported DisplayPort Configurations

	DisplayPort Role	Display Port Pin Assignment	DisplayPort Lanes
Configuration 1	UFP_D	Pin Assignment C	4-Lane
Configuration 2	UFP_D	Pin Assignment D	2-Lane and USB 3.1 data

Table 14. TPS65981 and HD3SS460 GPIO Control(1)

TPS65981 GPIO	HD3SS460 Control Pin	Description
GPIO0	AMSEL	Alternate Mode Selection (4-Lane DP/2-Lane DP + USB3.1)
GPIO3	EN	Super Speed Multiplexer Enable
DEBUG1	POL	Type-C Cable Orientation

(1) Specific GPIO pins are used for simplicity, but the configurable firmware settings allow the HD3SS460 GPIO Events to be mapped to any GPIO pin of the TPS65981.

Sheet 38	Shenzhen chuangzhicheng Technology Co.,LTD	
	Title: USB TypeC(TPS65981) A	Designer: Zhouwenchao
	Size: A3 / Project Name: NX10	Rev: A
	Date: Friday, May 14, 2021	Total sheet 44

PROPERTY NOTE:This document contains information confidential and property to CZC and shall not be reproduced or transferred to other documents or disclosed to others or used for any purpose other than that for which it was obtained without the expressed written consent of CZC!

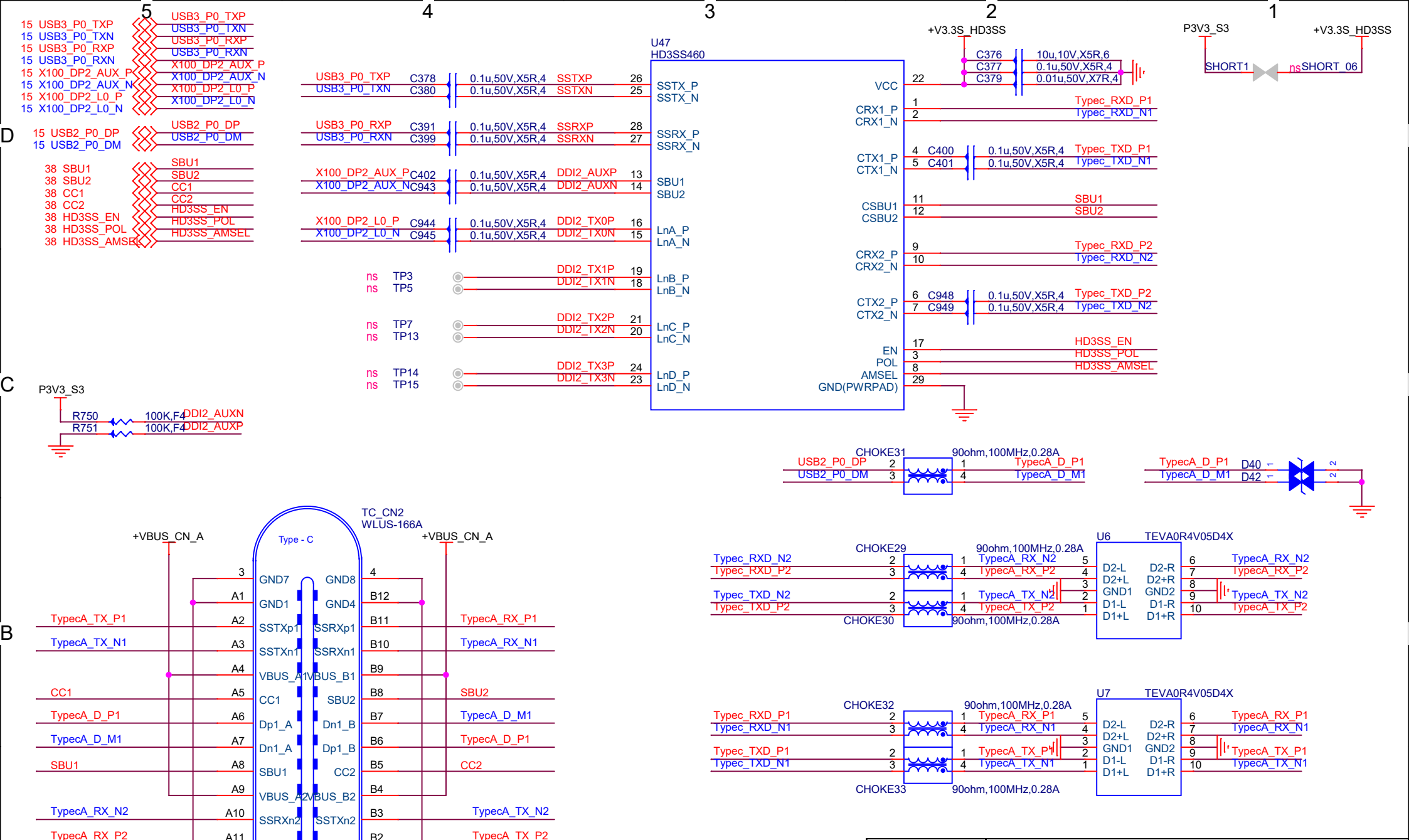

Sheet	Shenzhen chuangzhicheng Technology Co.,LTD	
39	Title: uPD720201 TYPE-C	Designer: Zhouwenchao
	Size: A4 / Project Name: NX10	Rev: A
	Date: Friday, May 14, 2021	Total sheet 44

PROPERTY NOTE:This document contains information confidential and property to CZC and shall not be reproduced or transferred to other documents or disclosed to others or used for any purpose other than that for which it was obtained without the expressed written consent of CZC!