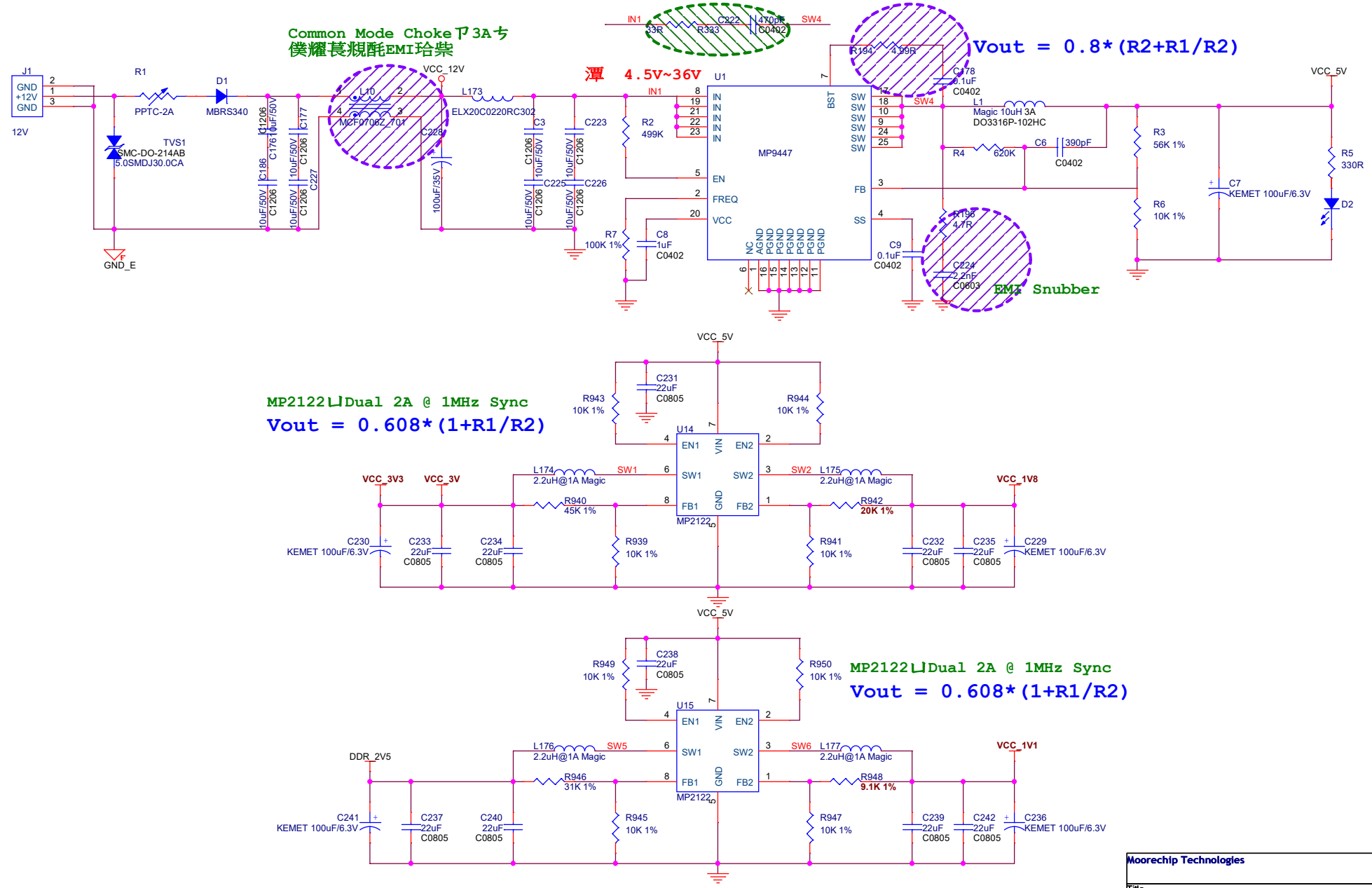


| | | | |
|---|---|---|---|
| Moorechip Technologies | | | |
| Title | NGA. DS90UB964_6900 REV1.2 | | |
| Size B | Document Number <Doc> | | Rev R1.3 |
| Date: Thursday, February 08, 2018 | | Sheet 1 of 9 | |

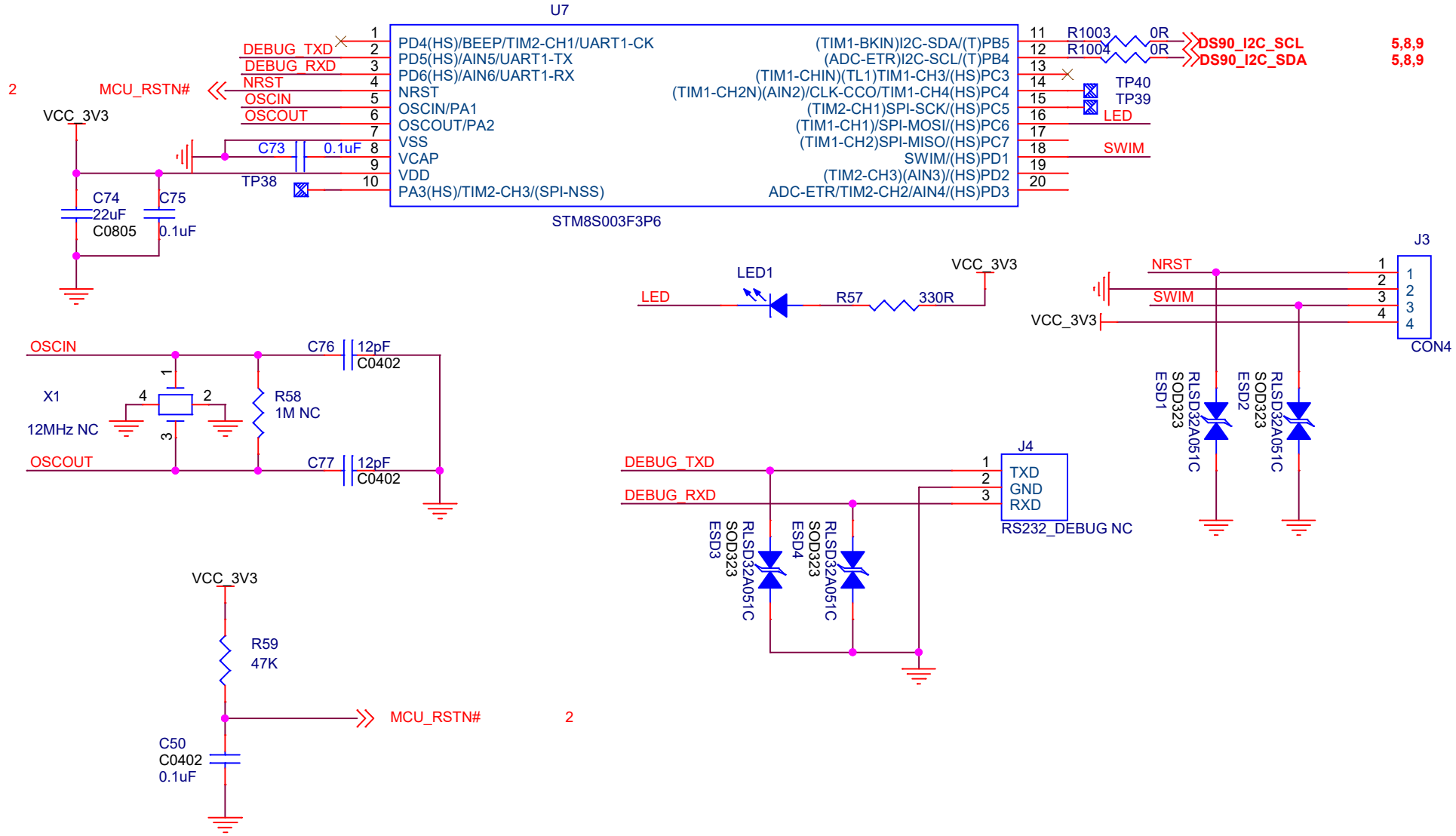


| | | |
|---|---|---|
| Moorechip Technologies | | |
| Title | NGA. DS90UB964_6900 REV1.2 | |
| Size A | Document Number <Doc> | Rev R1.3 |
| Date: Thursday, February 08, 2018 | Sheet 2 of 9 | |

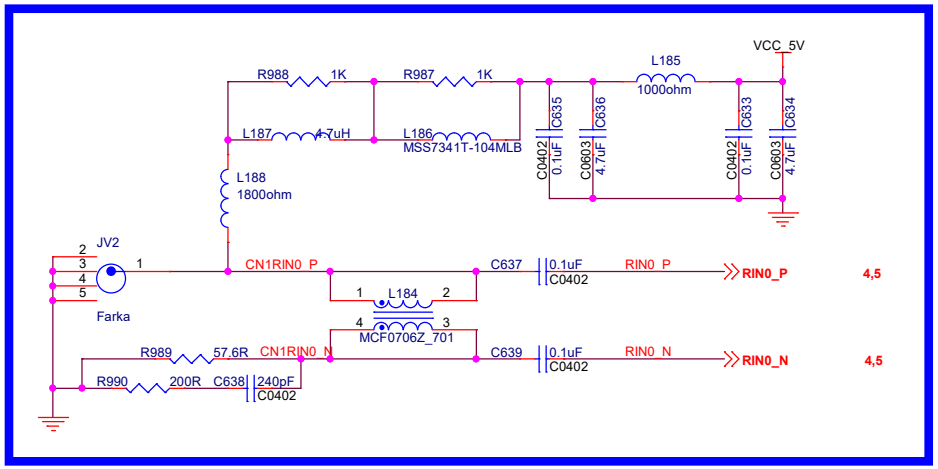


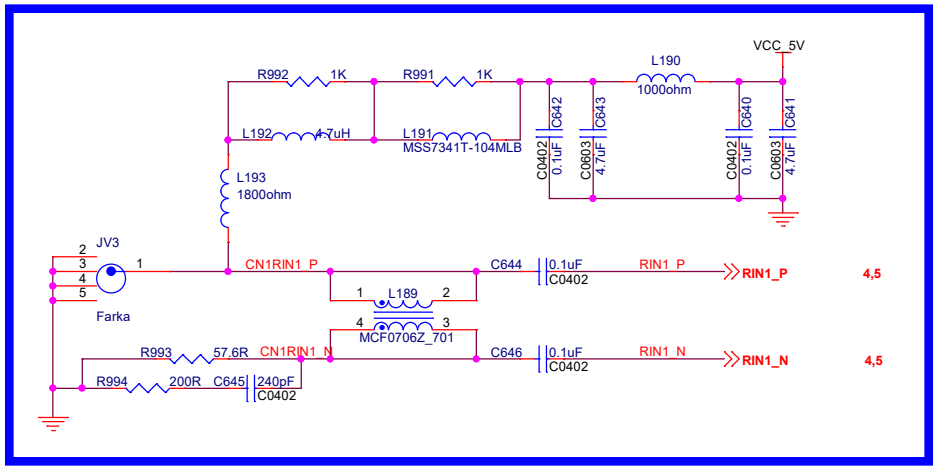


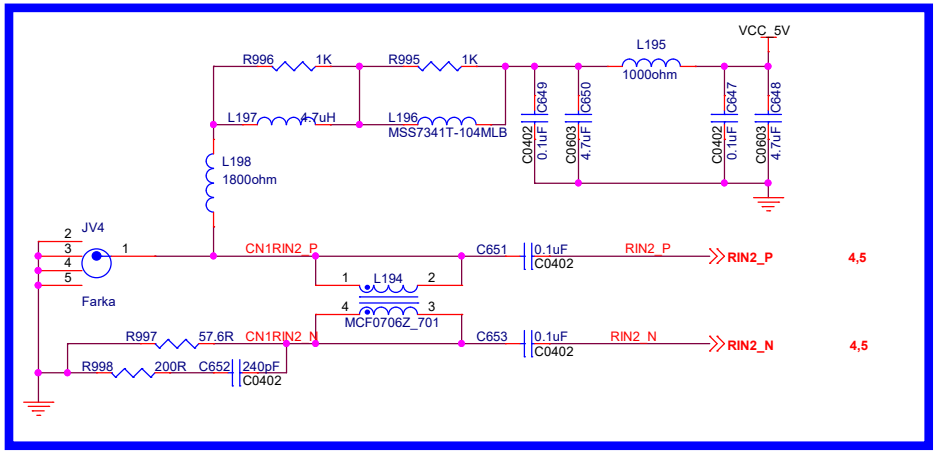


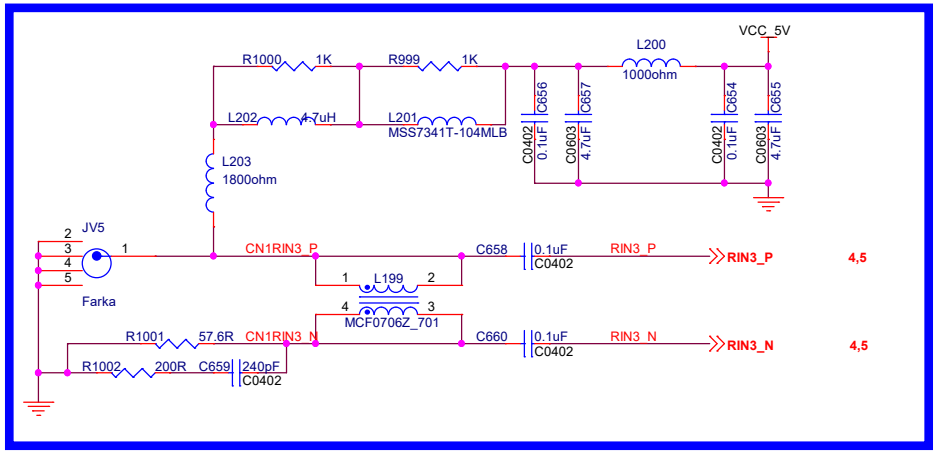


| | | |
|---|---|---|
| Moorechip Technologies | | |
| Title | NGA. DS90UB964_6900 REV1.2 | |
| Size B | Document Number <Doc> | Rev R1.3 |
| Date: Thursday, February 08, 2018 | Sheet 3 of 9 | |

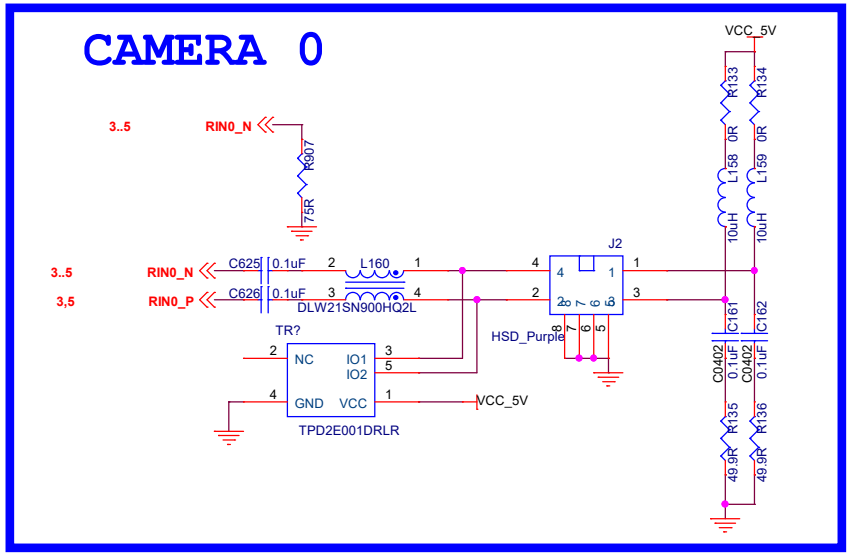


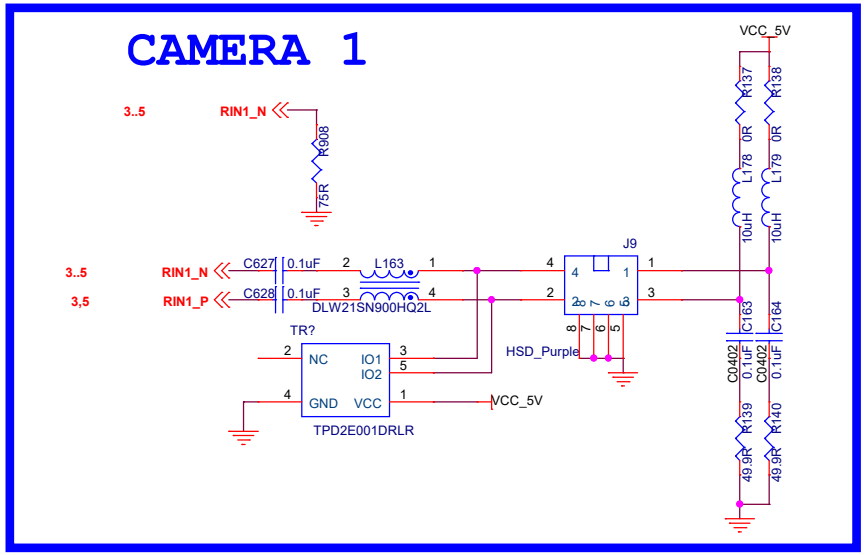


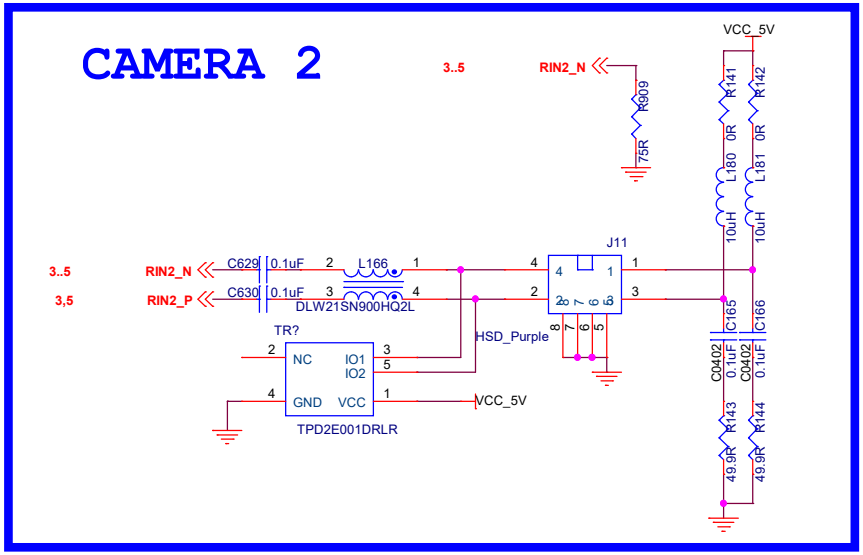


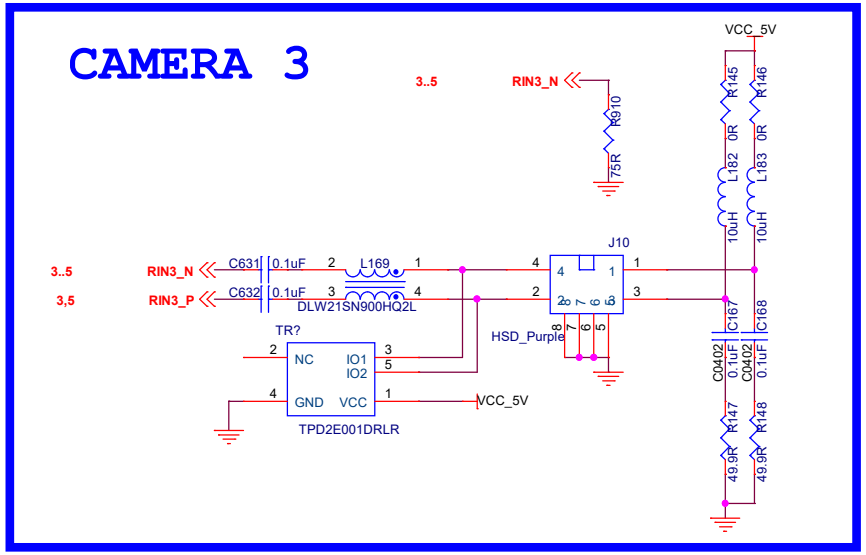


| | | | |
|---|---|---|---|
| Moorechip Technologies | | | |
| Title | NGA. DS90UB964_6900 REV1.2 | | |
| Size B | Document Number <Doc> | | Rev R1.3 |
| Date: Thursday, February 08, 2018 | | Sheet 4 of 9 | |

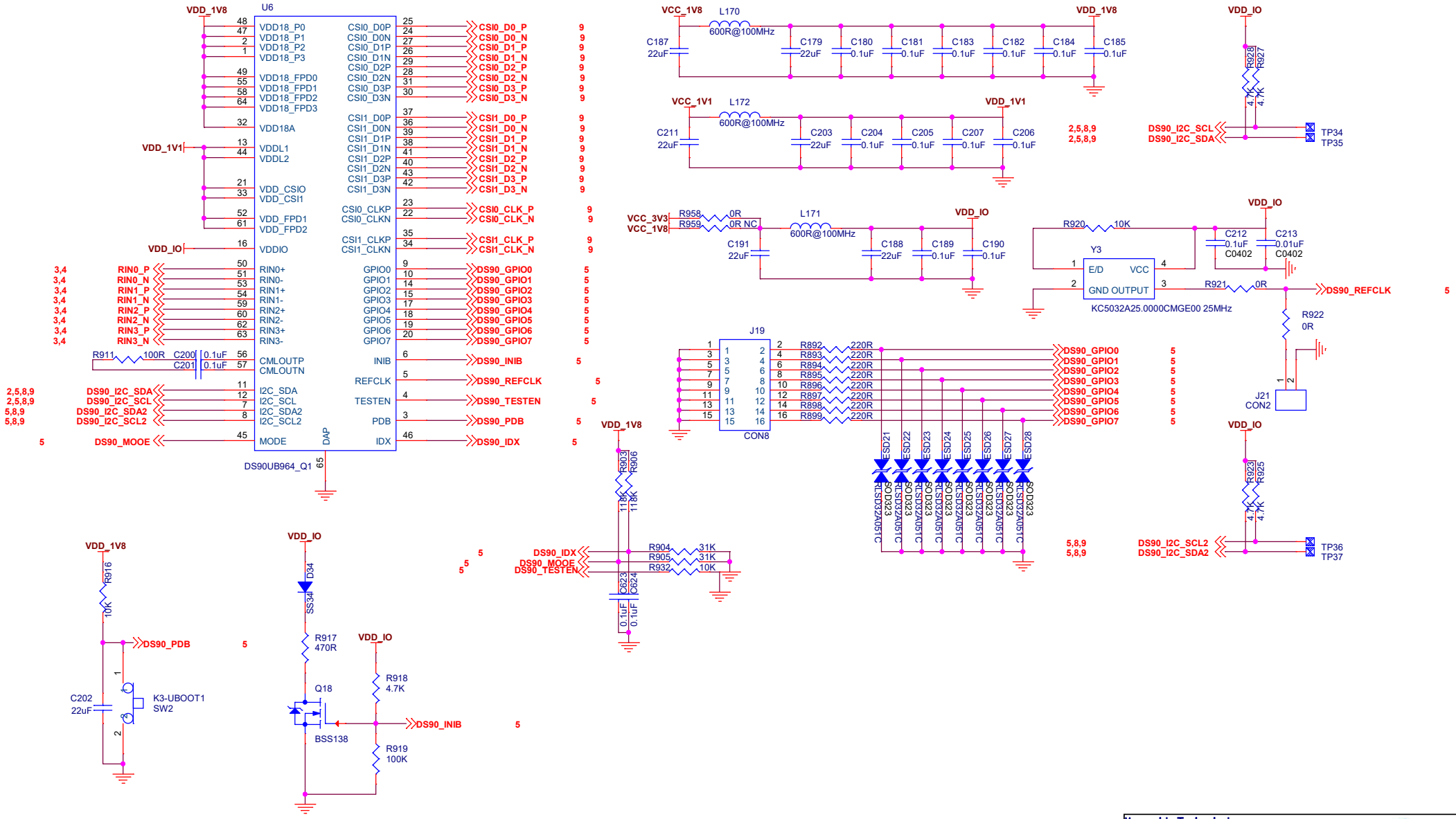


| | | | |
|---|---|---|---|
| Moorechip Technologies | | | |
| Title | NGA. DS90UB964_6900 REV1.2 | | |
| Size B | Document Number <Doc> | | Rev R1.3 |
| Date: Thursday, February 08, 2018 | Sheet 5 of 9 | | |

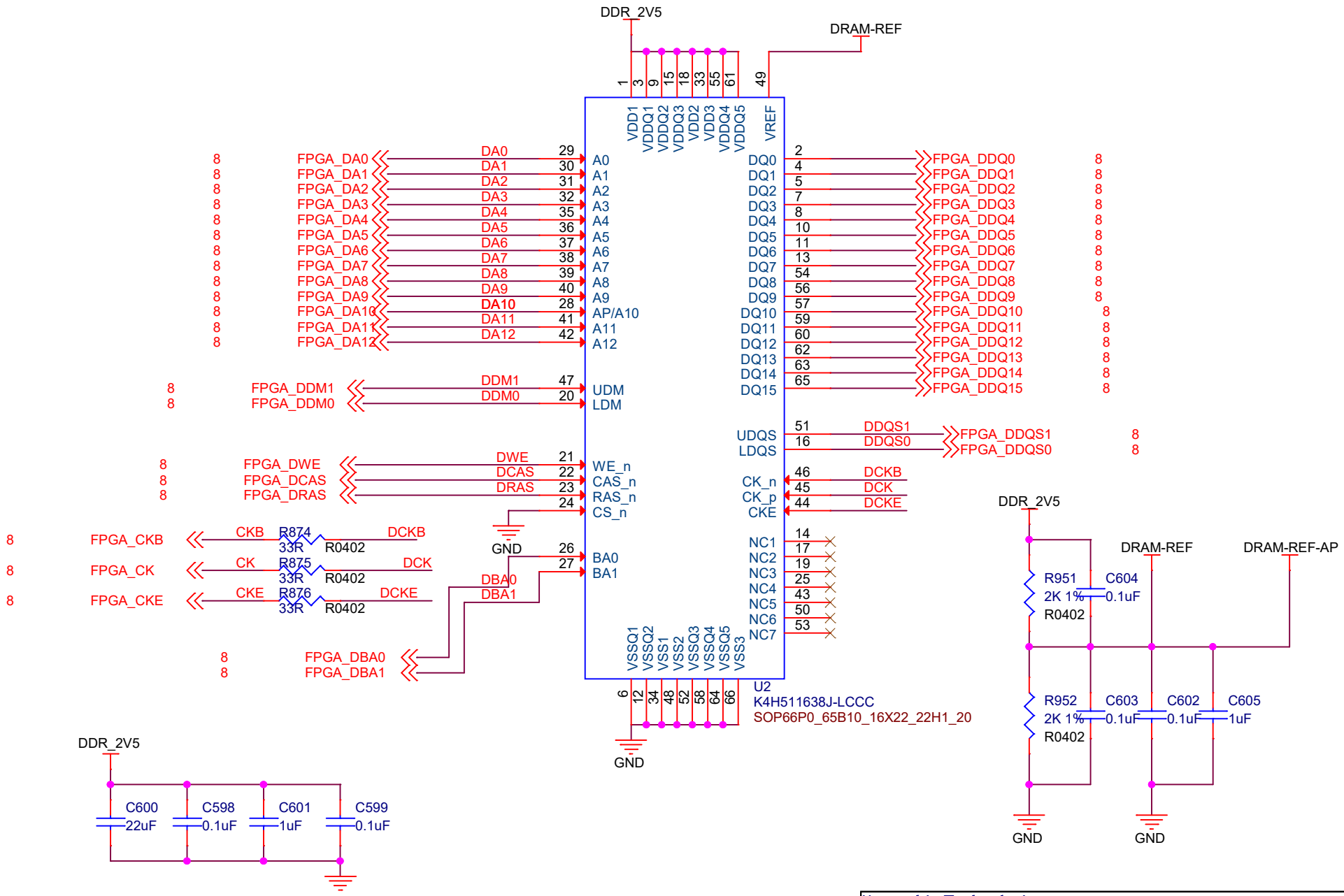


**Moorechip Technologies**

Title: **NGA. DS90UB964_6900 REV1.2**

| Size | Document Number | Rev |
|---|---|---|
| A | <Doc> | R1.3 |

Date: Thursday, February 08, 2018 Sheet 6 of 9

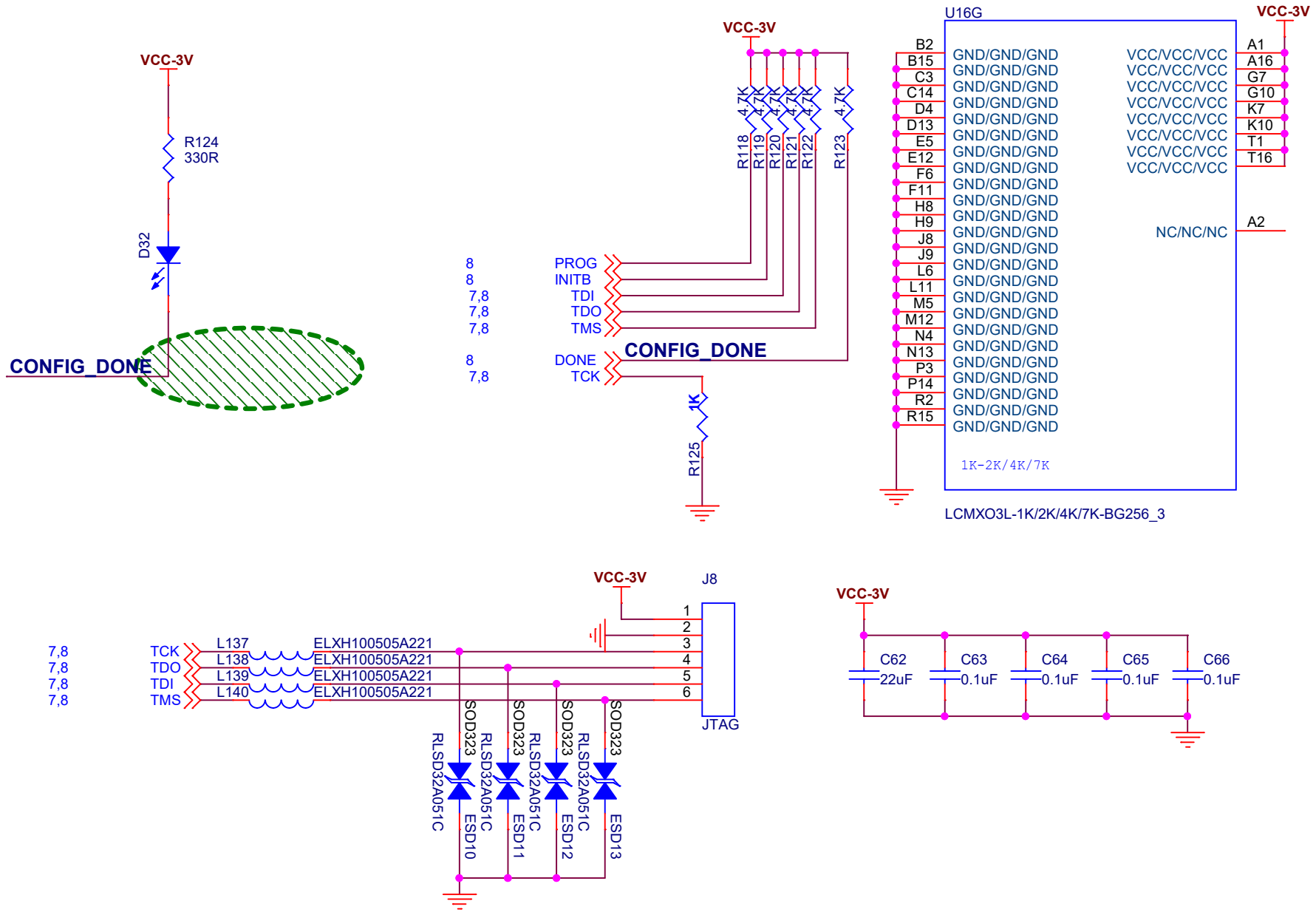


| | | |
|---|---|---|
| Moorechip Technologies | | |
| Title | NGA. DS90UB964_6900 REV1.2 | |
| Size A | Document Number <Doc> | Rev R1.3 |
| Date: Thursday, February 08, 2018 | Sheet 7 of 9 | |

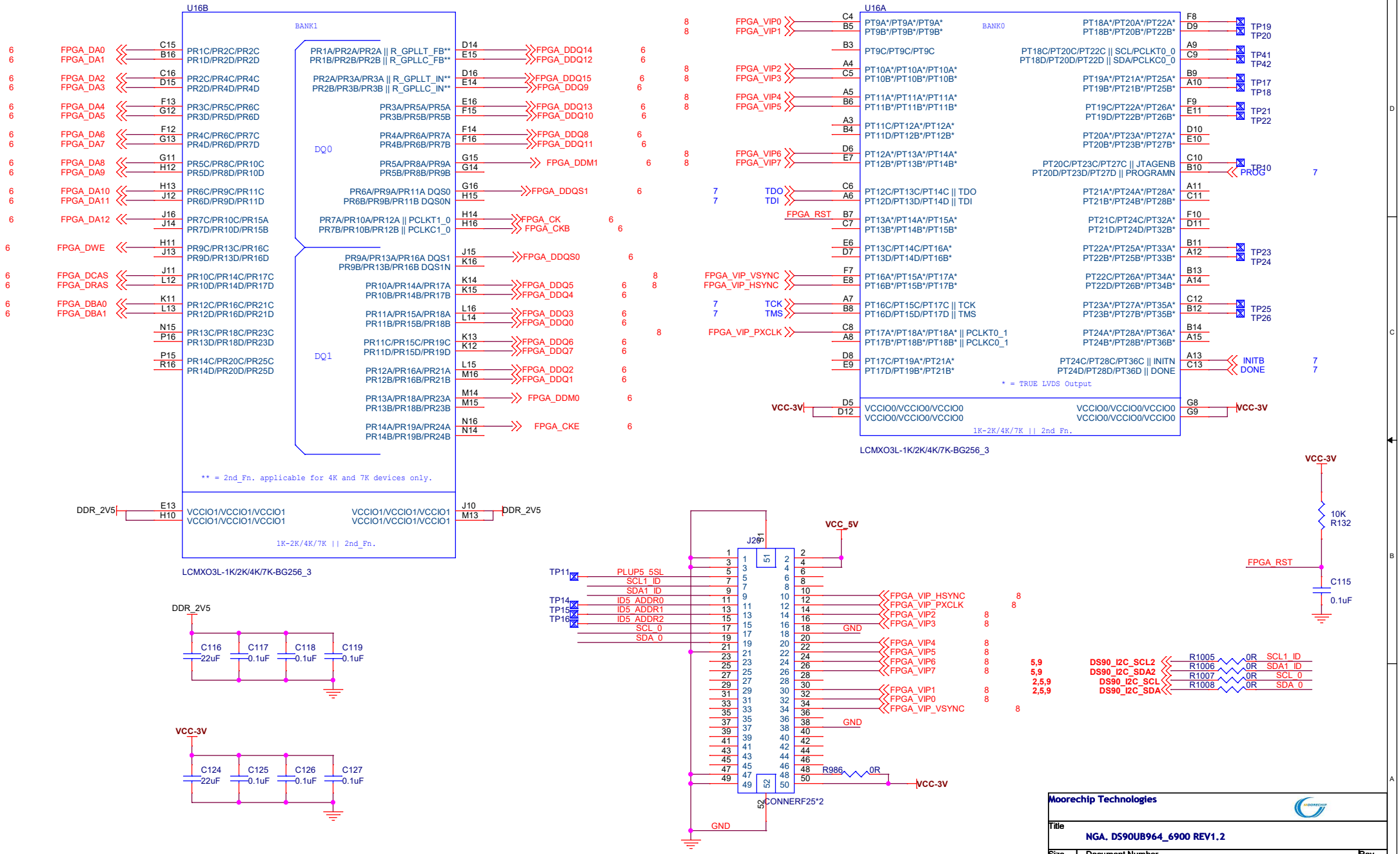
U16B
BANK1
DQ0
DQ1
** = 2nd_Fn. applicable for 4K and 7K devices only.
1K-2K/4K/7K || 2nd_Fn.
LCMXO3L-1K/2K/4K/7K-BG256_3
U16A
BANK0
* = TRUE LVDS Output
1K-2K/4K/7K || 2nd Fn.
LCMXO3L-1K/2K/4K/7K-BG256_3
J20
CONNERF25*2
VCC_5V
VCC-3V
DDR_2V5
GND
10K
R132
C115
0.1uF
FPGA_RST
DS90_I2C_SCL2
DS90_I2C_SDA2
DS90_I2C_SCL
DS90_I2C_SDA
R1005
R1006
R1007
R1008
SCL1_ID
SDA1_ID
SCL_0
SDA_0
R986
0R
C116
C117
C118
C119
22uF
0.1uF
C124
C125
C126
C127
Moorechip Technologies
Title
NGA. DS90UB964_6900 REV1.2
Size
B
Document Number
<Doc>
Rev
R1.3
Date:
Thursday, February 08, 2018
Sheet
8
of
9

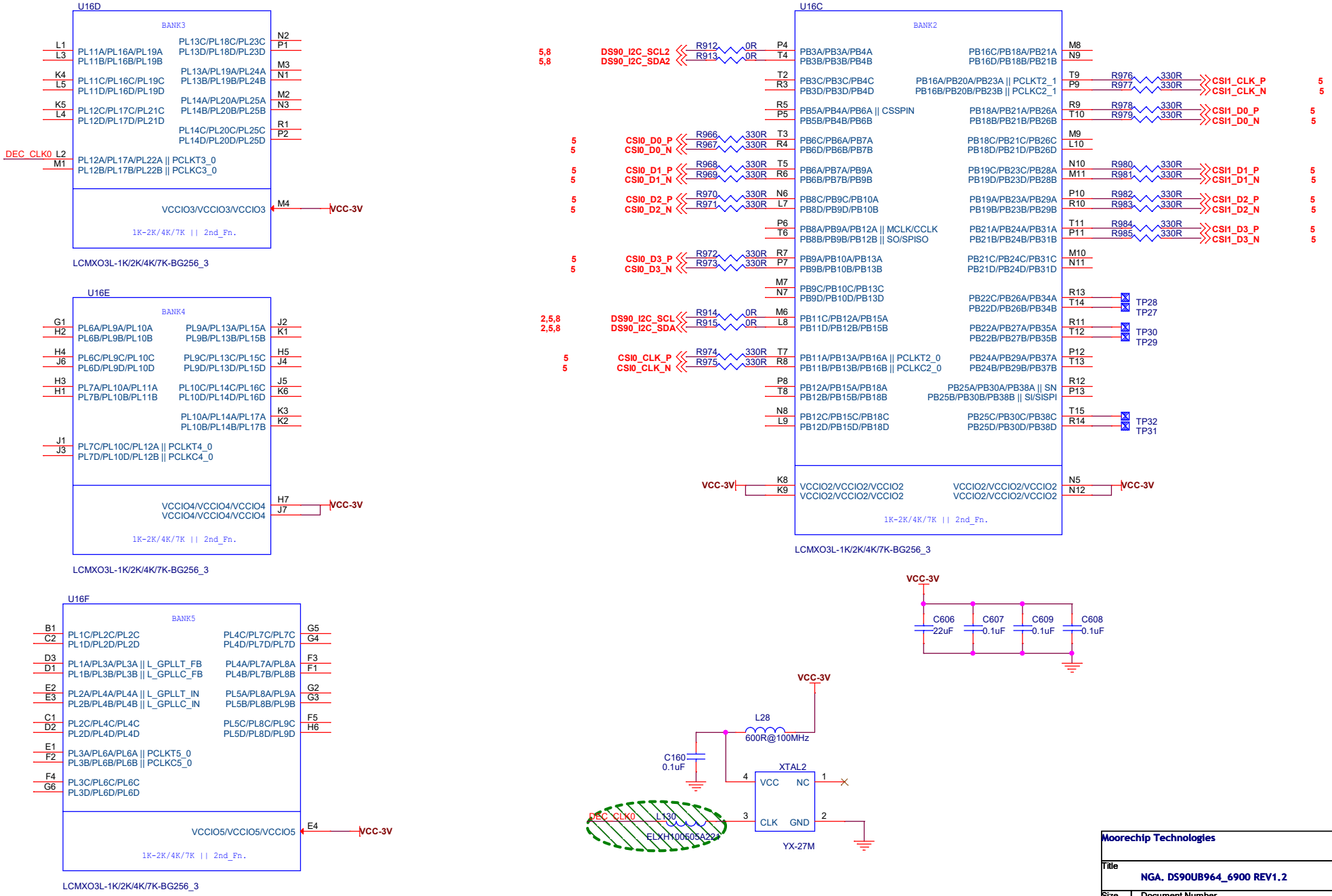


| | | |
|---|---|---|
| Moorechip Technologies | | |
| Title | NGA. DS90UB964_6900 REV1.2 | |
| Size B | Document Number <Doc> | Rev R1.3 |
| Date: Thursday, February 08, 2018 | Sheet 9 of 9 | |