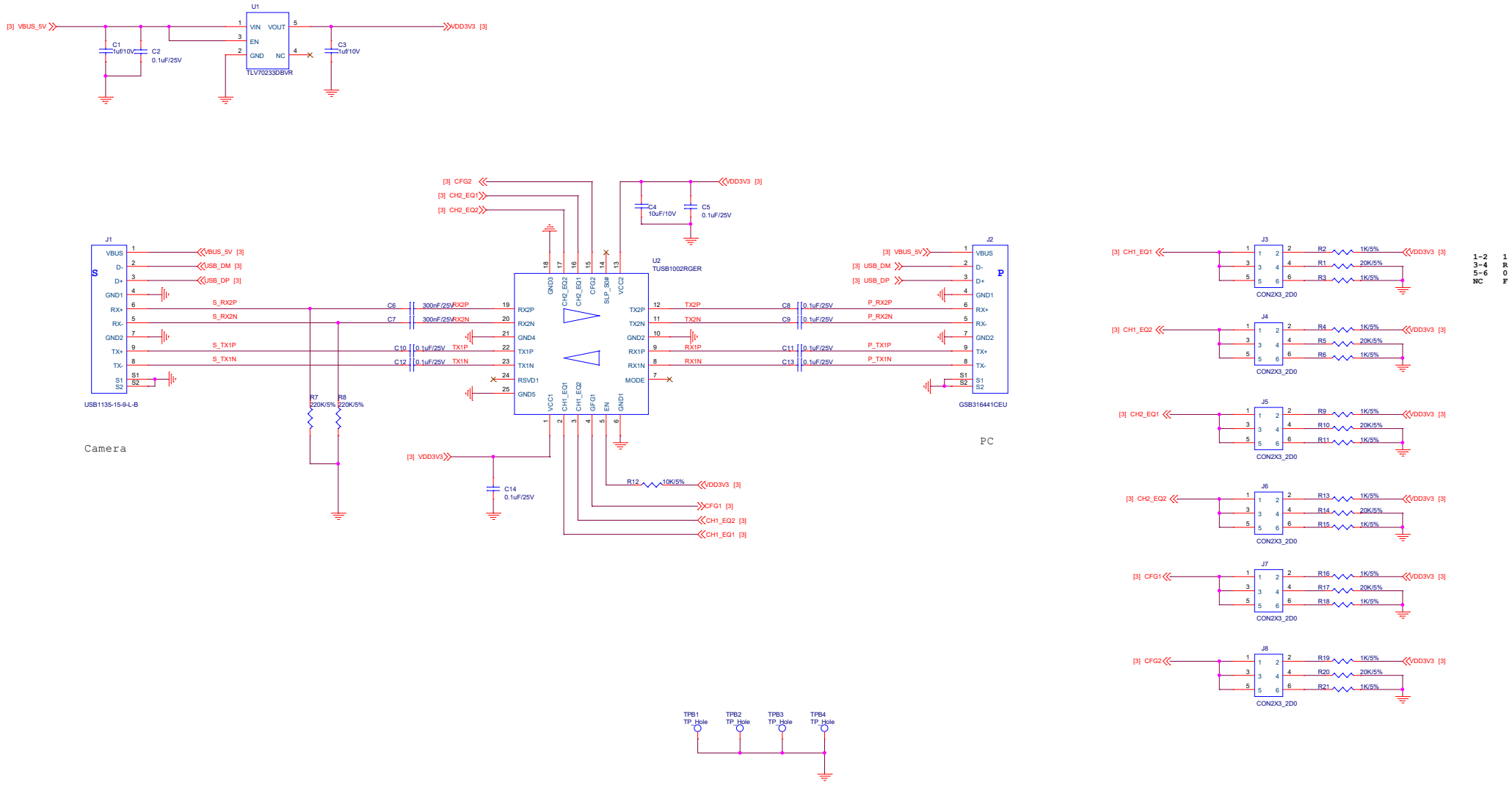

Pin Number	Signal Name	Description	Mating Sequence
1	VBUS	Power	Second
2	D-	USB 2.0 differential pair	Third
3	D+		
4	GND	Ground for power return	Second
5	StdA_SSRX-	SuperSpeed receiver differential pair	Last
6	StdA_SSRX+		
7	GND_DRAIN	Ground for signal return	
8	StdA_SSTX-	SuperSpeed transmitter differential pair	
9	StdA_SSTX+		
Shell	Shield	Connector metal shell	First

Note: Tx and Rx are defined from the host perspective