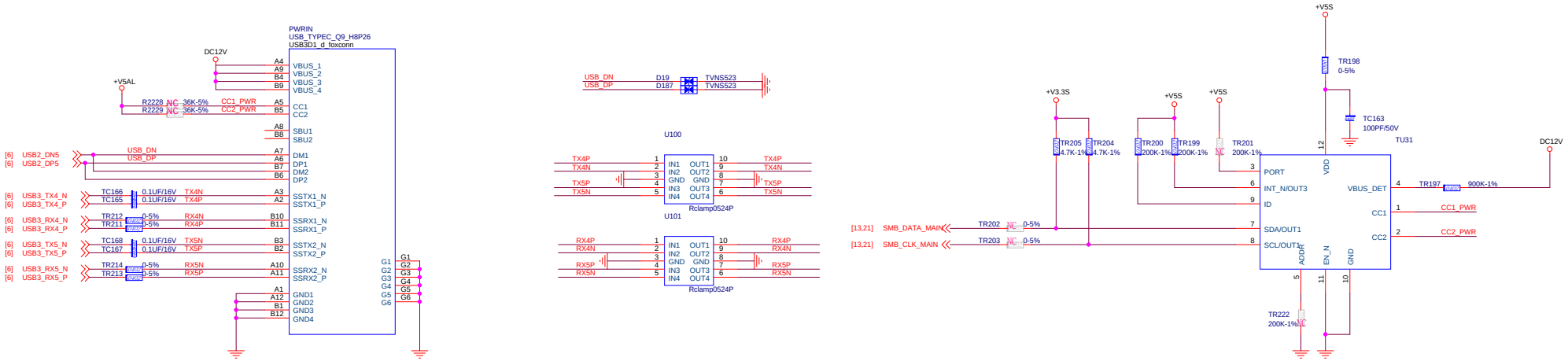
PWRIN
USB_TYPEC_Q9_H8P26
USB3D1_d_foxconn
DC12V
+V5AL
VBUS_1
VBUS_2
VBUS_3
VBUS_4
CC1
CC2
SBU1
SBU2
DM1
DP1
DM2
DP2
SSTX1_N
SSTX1_P
SSRX1_N
SSRX1_P
SSTX2_N
SSTX2_P
SSRX2_N
SSRX2_P
GND1
GND2
GND3
GND4
R2228 NC 36K-5% CC1_PWR
R2229 NC 36K-5% CC2_PWR
[6] USB2_DN5
[6] USB2_DP5
USB_DN
USB_DP
[6] USB3_TX4_N
[6] USB3_TX4_P
TC166 0.1UF/16V TX4N
TC165 0.1UF/16V TX4P
[6] USB3_RX4_N
[6] USB3_RX4_P
TR212 0-5% RX4N
TR211 0-5% RX4P
[6] USB3_TX5_N
[6] USB3_TX5_P
TC168 0.1UF/16V TX5N
TC167 0.1UF/16V TX5P
[6] USB3_RX5_N
[6] USB3_RX5_P
TR214 0-5% RX5N
TR213 0-5% RX5P
USB_DN D19 TVNS523
USB_DP D187 TVNS523
U100
TX4P
TX4N
TX5P
TX5N
IN1 OUT1
IN2 OUT2
GND GND
IN3 OUT3
IN4 OUT4
Rclamp0524P
U101
RX4P
RX4N
RX5P
RX5N
+V3.3S
+V5S
TR205 4.7K-1%
TR204 4.7K-1%
TR200 200K-1%
TR199 200K-1%
TR201 200K-1%
TR198 0-5%
TC163 100PF/50V
TU31
PORT
INT_N/OUT3
ID
SDA/OUT1
SCL/OUT1
VDD
VBUS_DET
CC1
CC2
ADDR
EN_N
GND
TR197 900K-1%
CC1_PWR
CC2_PWR
[13,21] SMB_DATA_MAIN
[13,21] SMB_CLK_MAIN
TR202 NC 0-5%
TR203 NC 0-5%
TR222 200K-1%