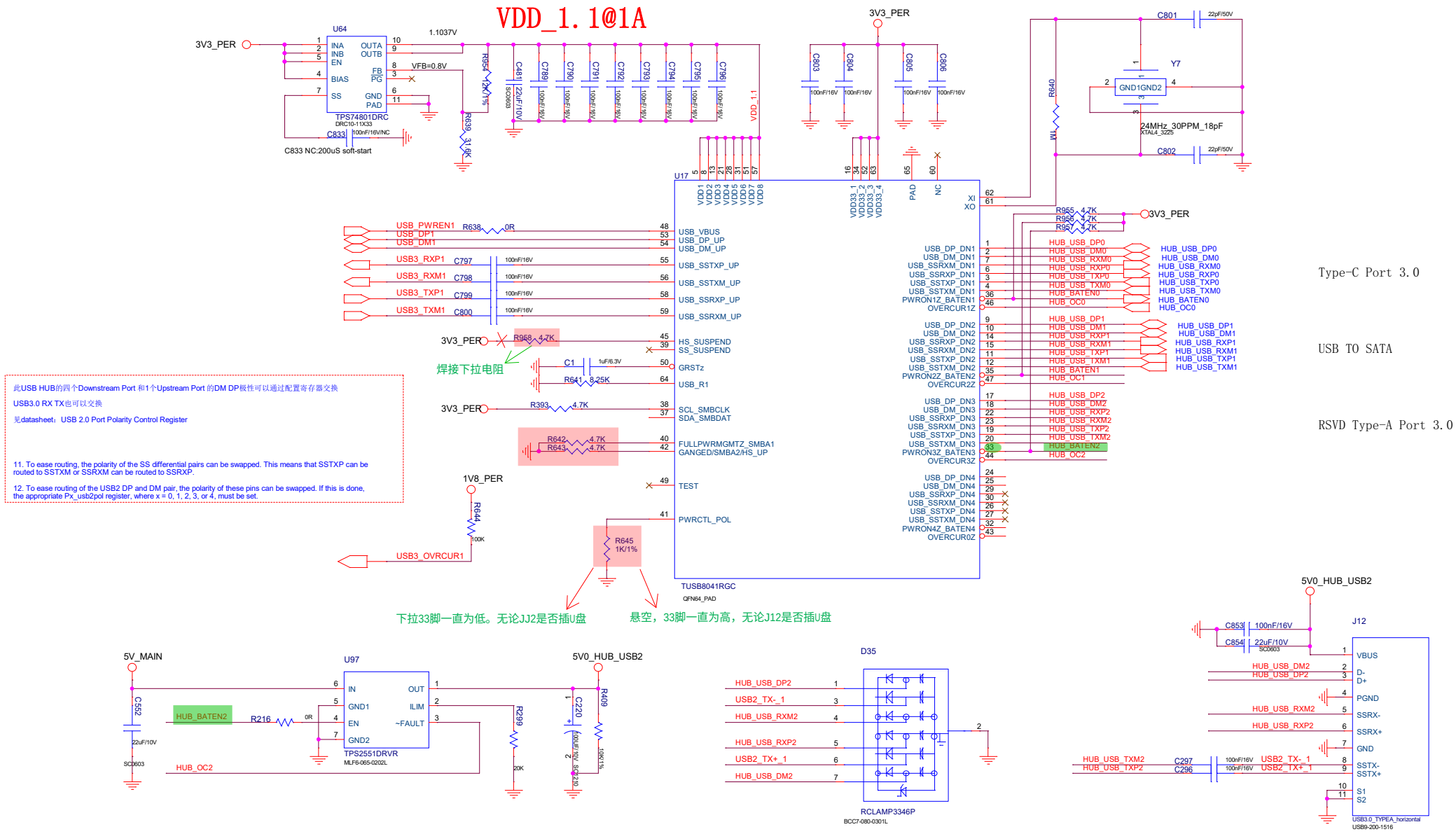

此USB HUB的四个Downstream Port 和1个Upstream Port 的DM DP极性可以通过配置寄存器交换

USB3.0 RX TX也可以交换

见datasheet：USB 2.0 Port Polarity Control Register

11. To ease routing, the polarity of the SS differential pairs can be swapped. This means that SSTXP can be routed to SSTXM or SSRXM can be routed to SSRXP.

12. To ease routing of the USB2 DP and DM pair, the polarity of these pins can be swapped. If this is done, the appropriate Px_usb2pol register, where x = 0, 1, 2, 3, or 4, must be set.

Title	<Title>		
Size A3	Document Number <Doc>		Rev <Rev Code>
Date: Monday, July 22, 2019	Sheet 14 of 21		