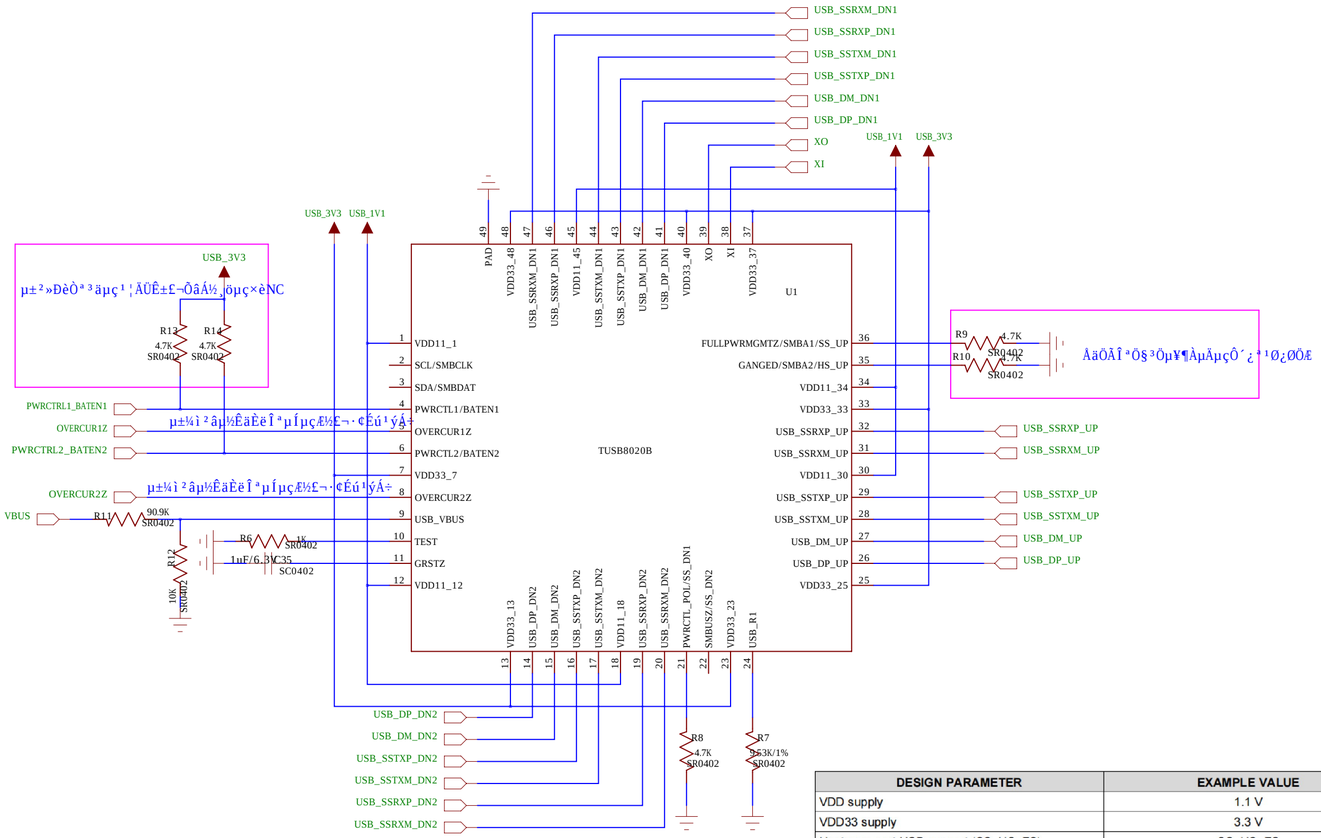

DESIGN PARAMETER	EXAMPLE VALUE
VDD supply	1.1 V
VDD33 supply	3.3 V
Upstream port USB support (SS, HS, FS)	SS, HS, FS
Downstream port 1 USB support (SS, HS, FS, LS)	SS, HS, FS, LS
Downstream port 2 USB support (SS, HS, FS, LS)	SS, HS, FS, LS
Number of removable downstream ports	2
Number of non-removable downstream ports	0
Full power management of downstream ports	Yes (FULLPWRMGMTZ = 0)
Individual control of downstream port power switch	Yes (GANGED = 0)
Power switch enable polarity	Active high (PWRCTL_POL = 0)
Battery charge support for downstream port 1	Yes
Battery charge support for downstream port 2	Yes
I²C EEPROM support	No
24-MHz clock source	Crystal

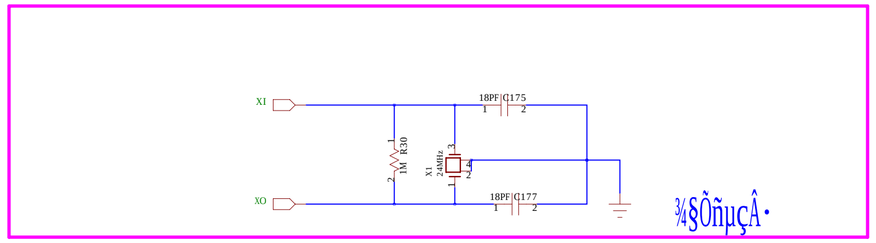

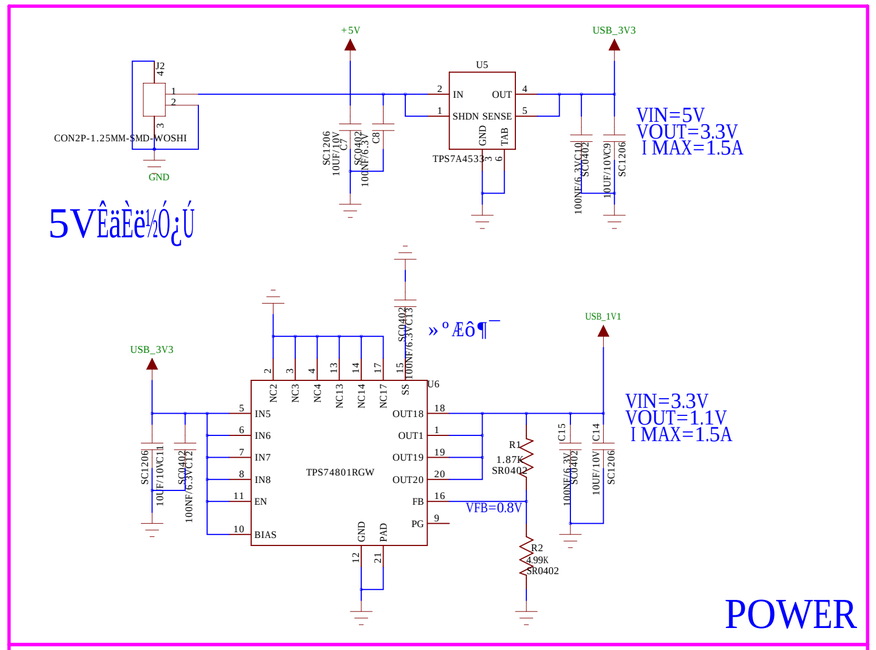

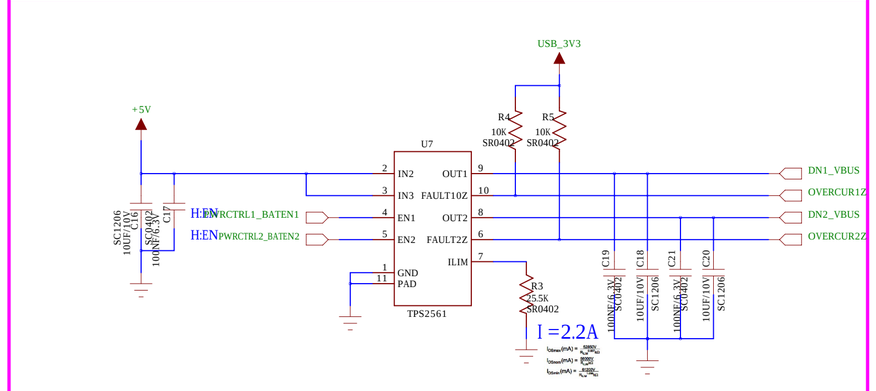

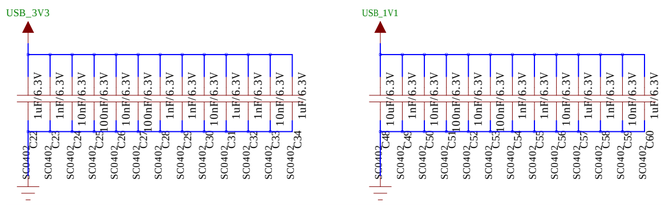

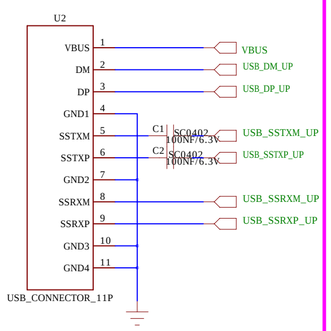

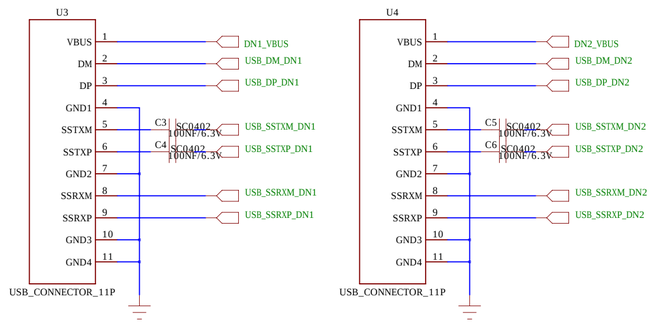

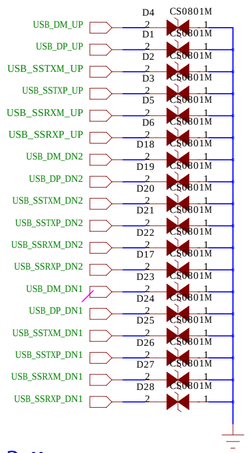

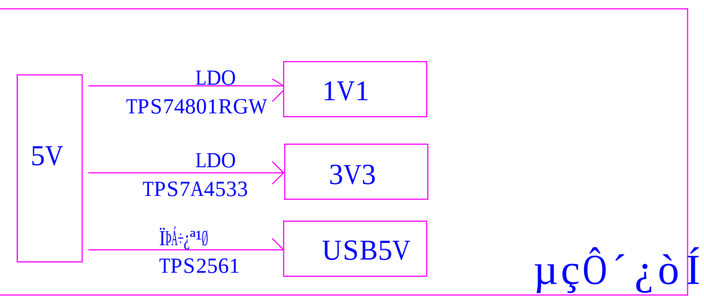

USB 3.0 ÊäÈë

USB3.0 Ë«¶Ë¿ÚÊä³ö

µçÔ´¿òÍ¼