AP22036 DS90UB954 Deserializer MARS Design CSI-2 (MIPI) Output

Page	Description
1	Title Page
2	Block Diagram
3	DS90UB954A-Q1 Deserializer
4	+12V Power

Rev	Author	Date	Description
Rev 0.0	Dmincinski	08/31/2016	Initial.
Rev 0.1	Dmincinski	09/08/2016	Add ground connection to P3 pins 4 and 5.
Rev 0.2	Dmincinski	09/12/2016	Correct values on schematic for R8,R25-R30,R36,R11,R13 and R24
Rev 1.0	Dmincinski	06/20/2017	Modifications/Additions 1. Change values of resistors R8, R11,R13 and R24 to reflect changes made to data sheet values. 2. Remove test points E6 and E7. and add test points E17andf E18. 3, Added beads L12,L13 and L14. used in +1.8V supply to U1 pins 7,29,31and 36, 4. Added additional decoupling capacitors C54,C55 and C57 to pins 29,31 and 36 5. Added additional decoupling capacitors C58,C59,C60 and C61 to pins 3,20,24 and 43. 6. Removed GPIO4 and GPIO5 from schematic. 7. Increase value of R35 from 10K to 30K. 8. Add Header (P4) to permit changing POC voltage from internal +12Vsupply to an external voltage supply
Rev 1.1	Dmincinski	07/03/2017	Replace capacitors C58 - C61 with auto grade components Removed R25-28. Moved grn pins from J2 pins 9&10 to pis 1&2.
Rev 1.2	janzik	07/18/2017	Connected unused data pins on J2 to GND, and +2V8 pins and +1V2 pins together, for mechanical strength..
Rev 1.3	Dmincinski	08/24/2017	Change I2C address from 0x78 to 0x7A. Reistor R8 changed from 25.5K to 10K. R11 from 95,3K to OPEN No other changes made to schematic

ON Semiconductor®

Title	Title	
Size C	Document Name AP22036 - TI DS90UB954 Deserializer MARS Design	Rev 1.3
Date: Thursday, August 24, 2017	Sheet 1 of 4	

Block Diagram

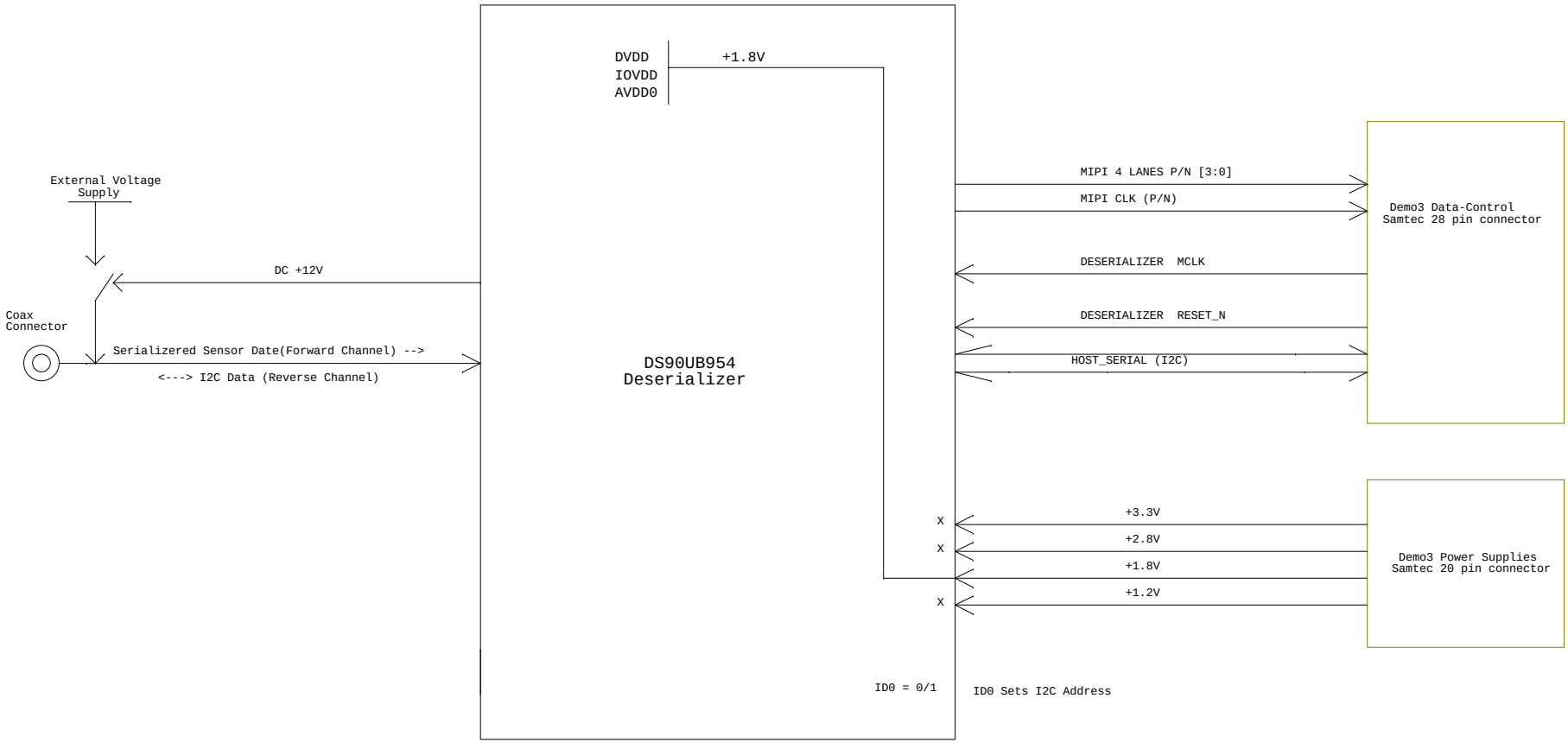

ON Semiconductor®

Title	Block Diagram	
Size C	Document Name AP22036 - TI DS90UB954 Deserializer MARS Design	Rev 1.3
Date: Thursday, August 24, 2017	Sheet 1 of 1	

DS90UB954 Deserializer

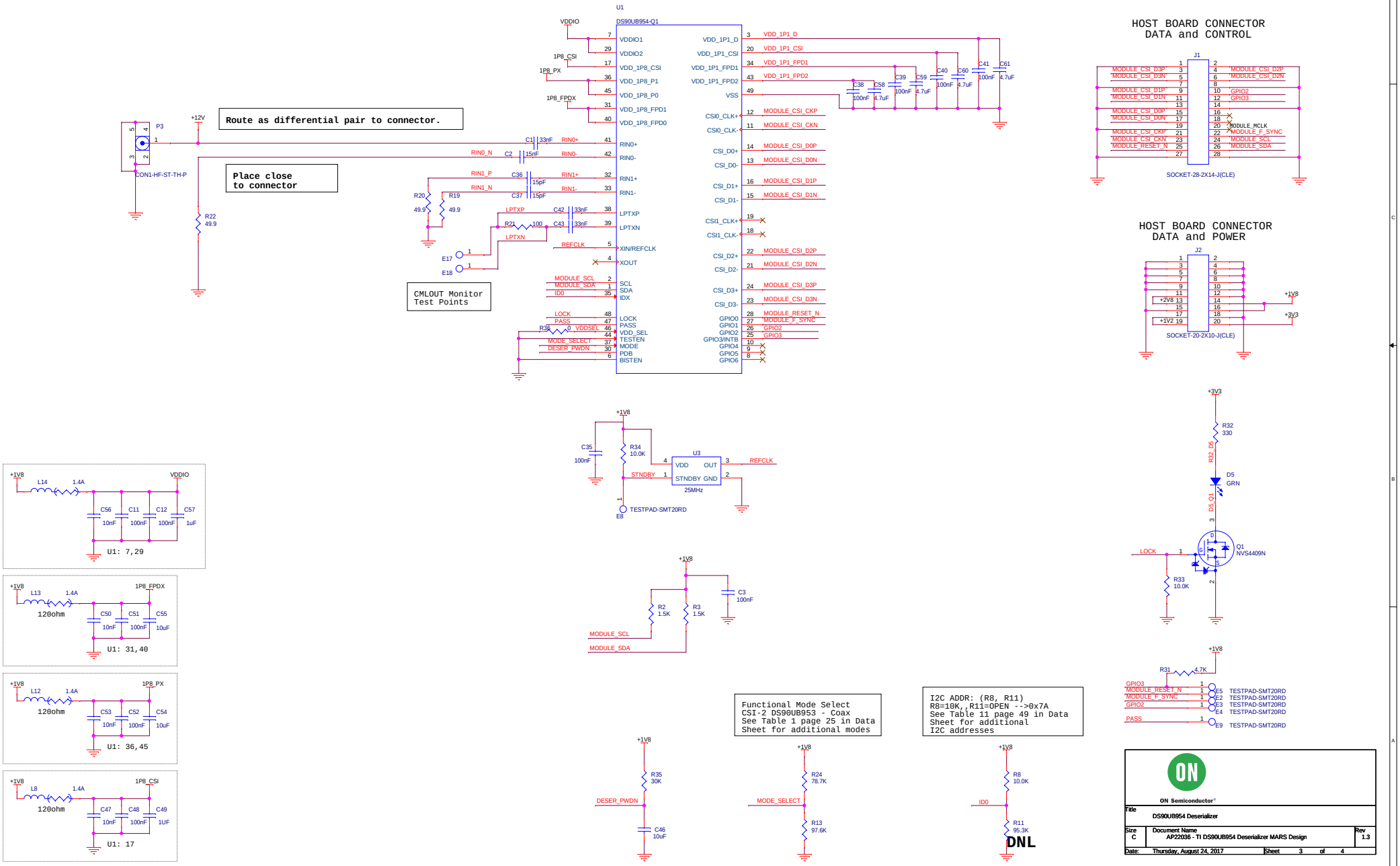

Power Supply

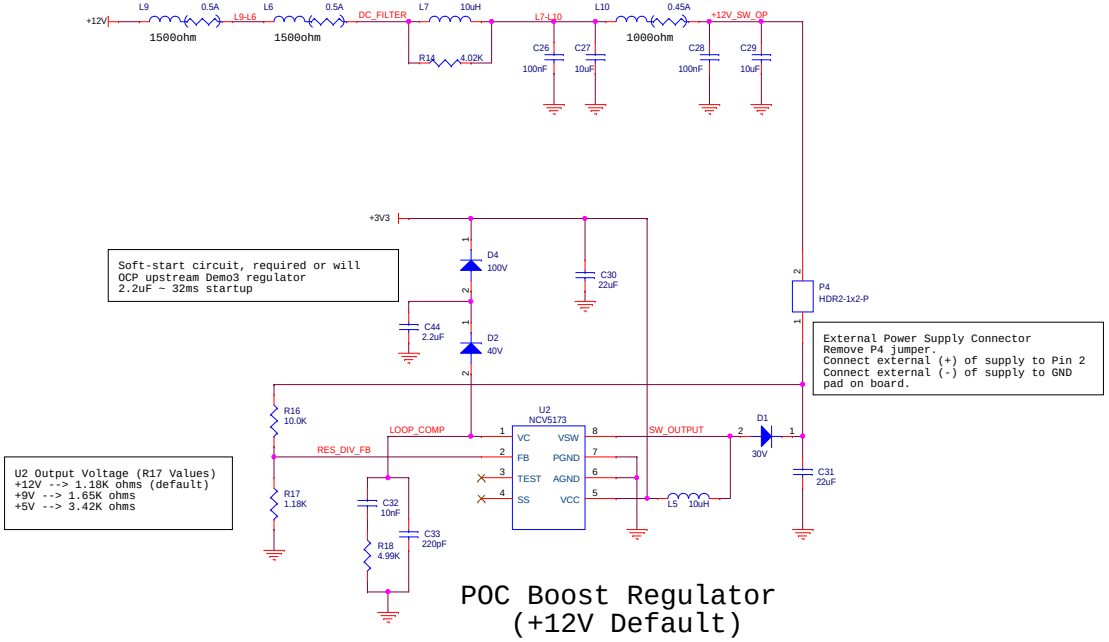

Soft-start circuit, required or will
OCP upstream Demo3 regulator
2.2uF ~ 32ms startup

External Power Supply Connector
Remove P4 jumper.
Connect external (+) of supply to Pin 2
Connect external (-) of supply to GND
pad on board.

U2 Output Voltage (R17 Values)
+12V --> 1.18K ohms (default)
+9V --> 1.65K ohms
+5V --> 3.42K ohms

POC Boost Regulator
(+12V Default)

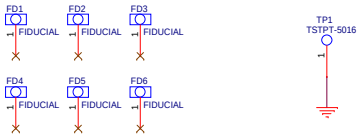

ON Semiconductor®

Title	+12V Power	
Size C	Document Name AP22036 - TI DS90UB954 Deserializer MARS Design	Rev 1.3
Date: Thursday, August 24, 2017	Sheet 4 of 4	