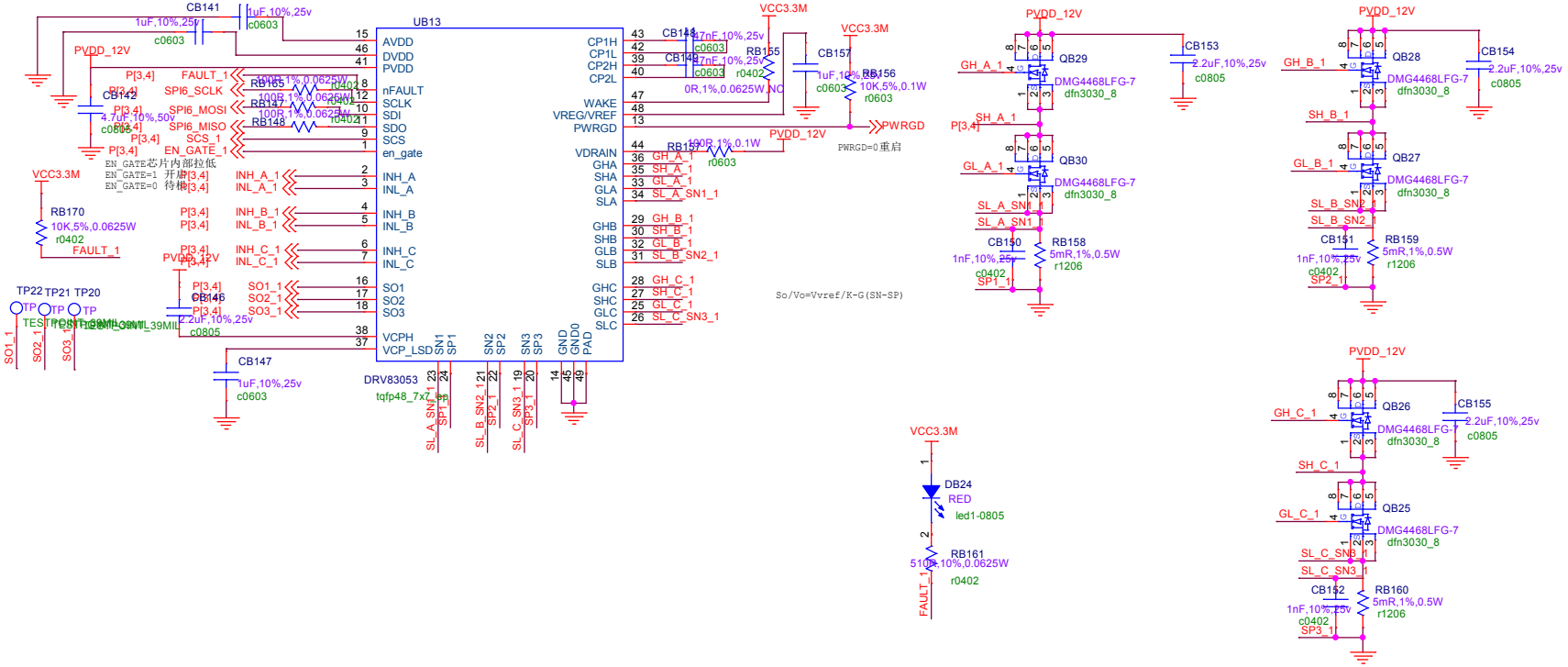

Title	<Title>
Size A3	Document Number 1
Rev	V1.0
Date: Friday, April 26, 2019	Sheet 1 of 1