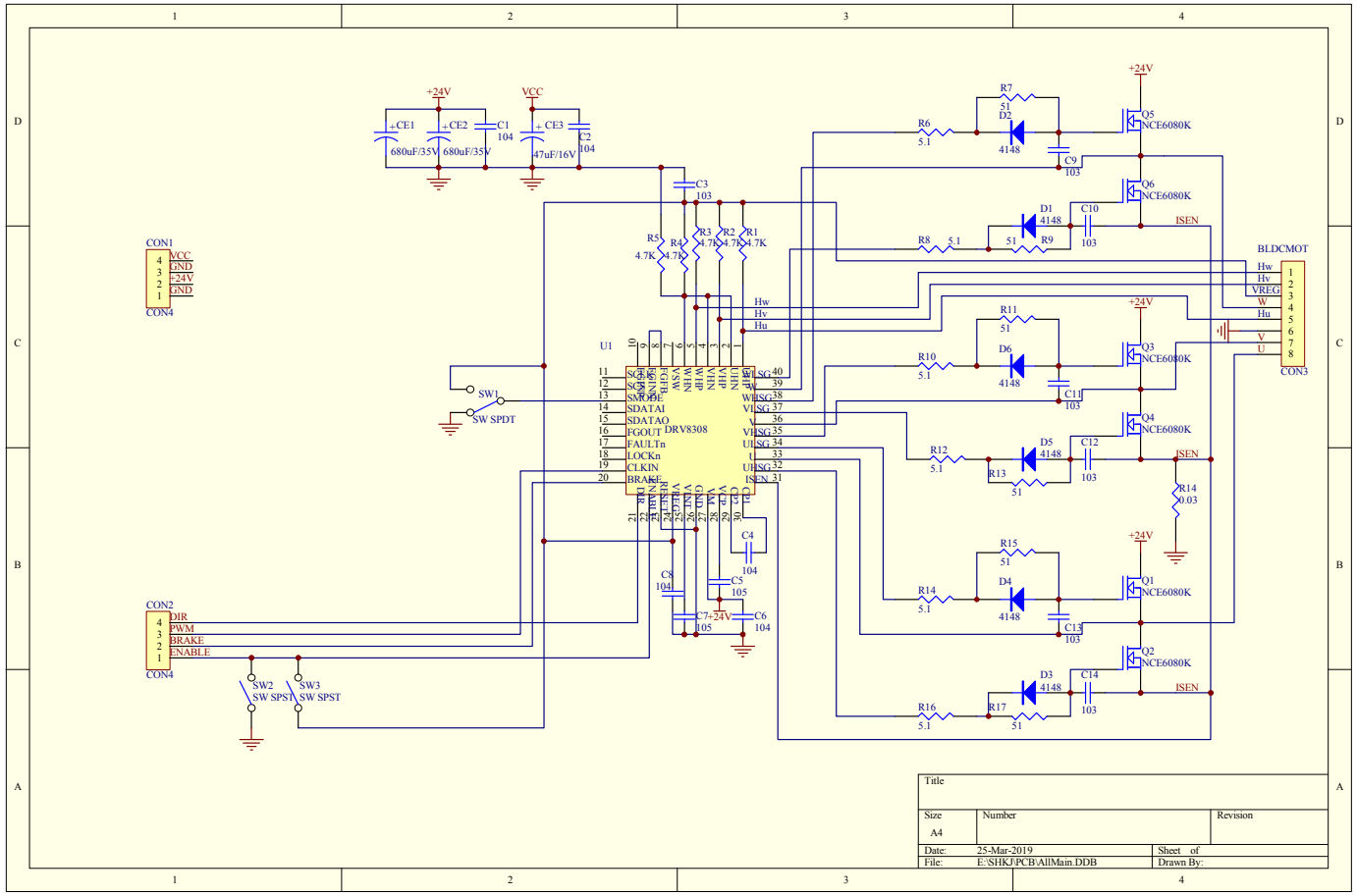
+24V
VCC
CE1
680uF/35V
CE2
680uF/35V
C1
104
CE3
47uF/16V
C2
104
C3
103
R5
4.7K
R4
4.7K
R3
4.7K
R2
4.7K
R1
4.7K
CON1
VCC
GND
+24V
GND
CON4
U1
DRV8308
SW1
SW SPDT
CON2
DIR
PWM
BRAKE
ENABLE
CON4
SW2
SW SPST
SW3
SW SPST
C4
104
C5
105
C6
104
C7
105
C8
104
R6
5.1
R7
51
D2
4148
C9
103
Q5
NCE6080K
Q6
NCE6080K
D1
4148
C10
103
R8
5.1
51
R9
ISEN
BLDCMOT
Hw
Hv
VREG
W
Hu
V
U
CON3
R10
5.1
R11
51
D6
4148
C11
103
Q3
NCE6080K
Q4
NCE6080K
R12
5.1
D5
4148
C12
103
R13
51
R14
0.03
R14
5.1
R15
51
D4
4148
C13
103
Q1
NCE6080K
Q2
NCE6080K
R16
5.1
R17
51
D3
4148
C14
103
Title
Size
A4
Number
Revision
Date:
25-Mar-2019
Sheet of
File:
E:\SHKJ\PCB\AllMain.DDB
Drawn By: