福昕PDF编辑器

• 永久　• 轻巧　• 自由

升级会员　　批量购买

永久使用
无限制使用次数

极速轻巧
超低资源占用，告别卡顿慢

自由编辑
享受Word一样的编辑自由

扫一扫，关注公众号

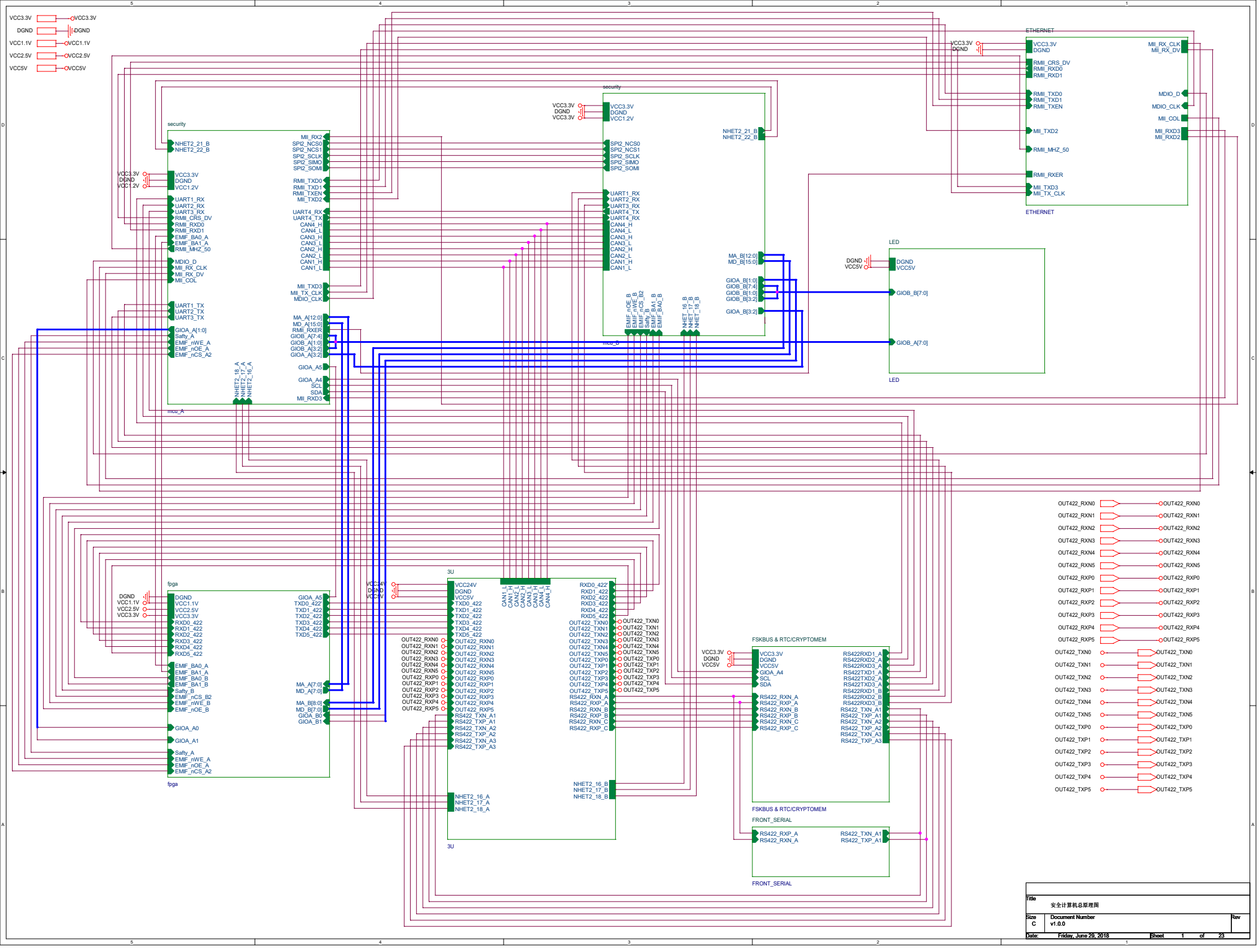
VCC3.3V
DGND
VCC1.1V
VCC2.5V
VCC5V
security
NHET2_21_B
NHET2_22_B
VCC3.3V
DGND
VCC1.2V
UART1_RX
UART2_RX
UART3_RX
RMII_CRS_DV
RMII_RXD0
RMII_RXD1
EMIF_BA0_A
EMIF_BA1_A
RMII_MHZ_50
MDIO_D
MII_RX_CLK
MII_RX_DV
MII_COL
UART1_TX
UART2_TX
UART3_TX
GIOA_A[1:0]
Safty_A
EMIF_nWE_A
EMIF_nOE_A
EMIF_nCS_A2
MII_RX2
SPI2_NCS0
SPI2_NCS1
SPI2_SCLK
SPI2_SIMO
SPI2_SOMI
RMII_TXD0
RMII_TXD1
RMII_TXEN
MII_TXD2
UART4_RX
UART4_TX
CAN4_H
CAN4_L
CAN3_H
CAN3_L
CAN2_H
CAN2_L
CAN1_H
CAN1_L
MII_TXD3
MII_TX_CLK
MDIO_CLK
MA_A[12:0]
RMII_RXER
GIOB_A[7:4]
GIOB_A[1:0]
GIOB_A[3:2]
GIOA_A5
GIOA_A4
SCL
SDA
MII_RXD3
NHET2_18_A
NHET2_17_A
NHET2_16_A
mcu_A
MA_B[12:0]
MD_B[15:0]
GIOA_B[1:0]
GIOB_B[7:4]
GIOB_B[1:0]
GIOB_B[3:2]
GIOA_B[3:2]
EMIF_nOE_B
EMIF_nWE_B
EMIF_nCS_B2
Safty_B
EMIF_BA1_B
EMIF_BA0_B
NHET_16_B
NHET_17_B
NHET_18_B
mcu_B
ETHERNET
MII_RX_CLK
MII_RX_DV
MDIO_D
MDIO_CLK
MII_COL
MII_RXD3
MII_RXD2
LED
GIOB_B[7:0]
GIOB_A[7:0]
fpga
DGND
VCC1.1V
VCC2.5V
VCC3.3V
RXD0_422
RXD1_422
RXD2_422
RXD3_422
RXD4_422
RXD5_422
EMIF_BA0_A
EMIF_BA1_A
EMIF_BA0_B
EMIF_BA1_B
Safty_B
EMIF_nCS_B2
EMIF_nWE_B
EMIF_nOE_B
GIOA_A0
GIOA_A1
Safty_A
EMIF_nWE_A
EMIF_nOE_A
EMIF_nCS_A2
GIOA_A5
TXD0_422
TXD1_422
TXD2_422
TXD3_422
TXD4_422
TXD5_422
MA_A[7:0]
MD_A[7:0]
MA_B[8:0]
MD_B[7:0]
GIOA_B0
GIOA_B1
3U
VCC24V
VCC5V
TXD0_422
TXD1_422
TXD2_422
TXD3_422
TXD4_422
TXD5_422
OUT422_RXN0
OUT422_RXN1
OUT422_RXN2
OUT422_RXN3
OUT422_RXN4
OUT422_RXN5
OUT422_RXP0
OUT422_RXP1
OUT422_RXP2
OUT422_RXP3
OUT422_RXP4
OUT422_RXP5
RS422_TXN_A1
RS422_TXP_A1
RS422_TXN_A2
RS422_TXP_A2
RS422_TXN_A3
RS422_TXP_A3
NHET2_16_A
NHET2_17_A
NHET2_18_A
CAN1_H
CAN1_L
CAN2_H
CAN2_L
CAN3_H
CAN3_L
CAN4_H
CAN4_L
RXD0_422
RXD1_422
RXD2_422
RXD3_422
RXD4_422
RXD5_422
OUT422_TXN0
OUT422_TXN1
OUT422_TXN2
OUT422_TXN3
OUT422_TXN4
OUT422_TXN5
OUT422_TXP0
OUT422_TXP1
OUT422_TXP2
OUT422_TXP3
OUT422_TXP4
OUT422_TXP5
RS422_RXN_A
RS422_RXP_A
RS422_RXN_B
RS422_RXP_B
RS422_RXN_C
RS422_RXP_C
NHET2_16_B
NHET2_17_B
NHET2_18_B
FSKBUS & RTC/CRYPTOMEM
VCC3.3V
DGND
VCC5V
GIOA_A4
SCL
SDA
RS422RXD1_A
RS422RXD2_A
RS422RXD3_A
RS422TXD1_A
RS422TXD2_A
RS422TXD3_A
RS422RXD1_B
RS422RXD2_B
RS422RXD3_B
RS422_TXN_A1
RS422_TXP_A1
RS422_TXN_A2
RS422_TXP_A2
RS422_TXN_A3
RS422_TXP_A3
FRONT_SERIAL
RS422_RXP_A
RS422_RXN_A
RS422_TXN_A1
RS422_TXP_A1
Title
安全计算机总原理图
Size
C
Document Number
v1.0.0
Rev
Date: Friday, June 29, 2018
Sheet 1 of 23

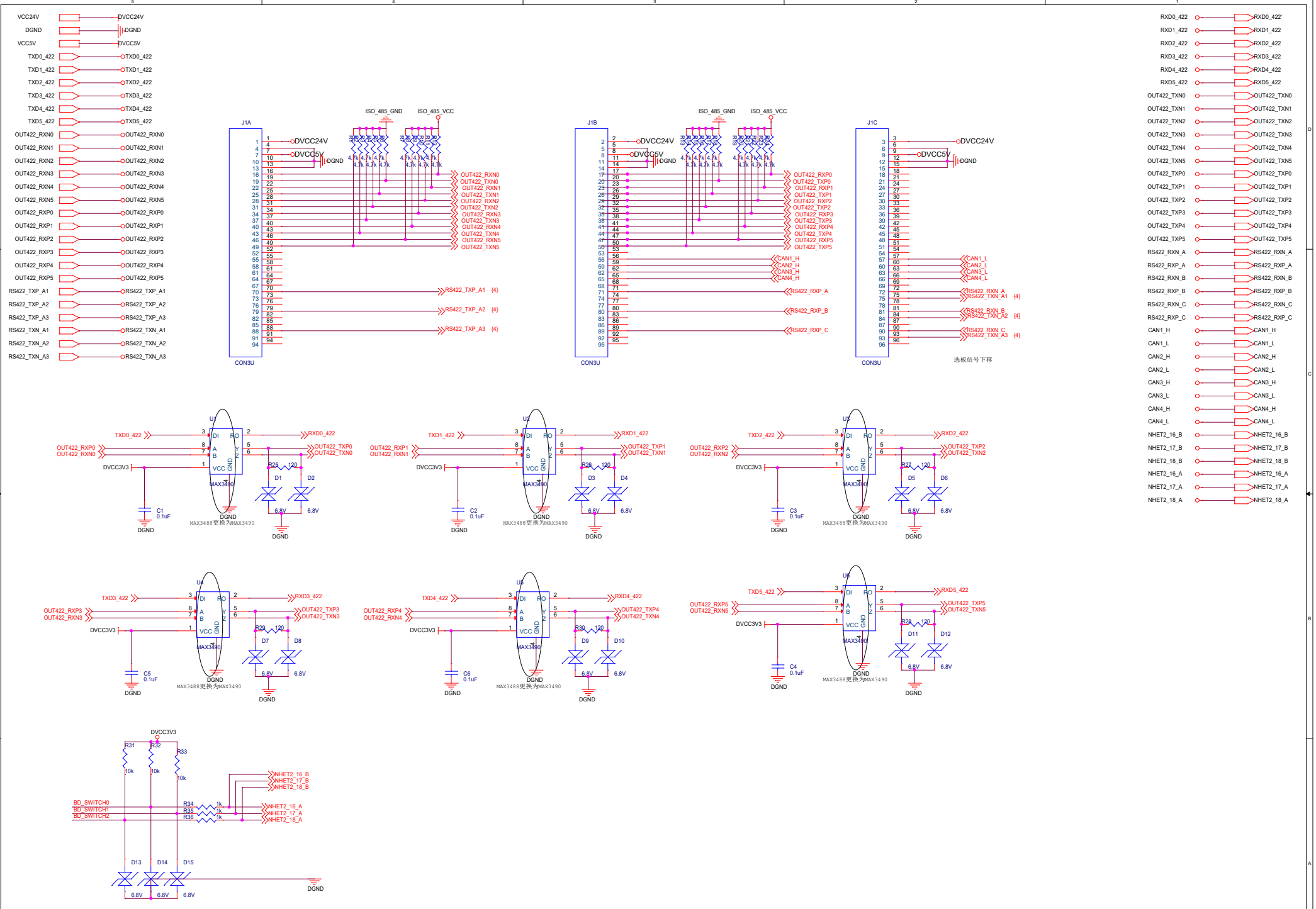

Title

安全计算机3U口（阻容范围0-50）

Size	Document Number	Rev
C	v1.0.0 可能要改	

Date: Friday, June 29, 2018 Sheet 2 of 23

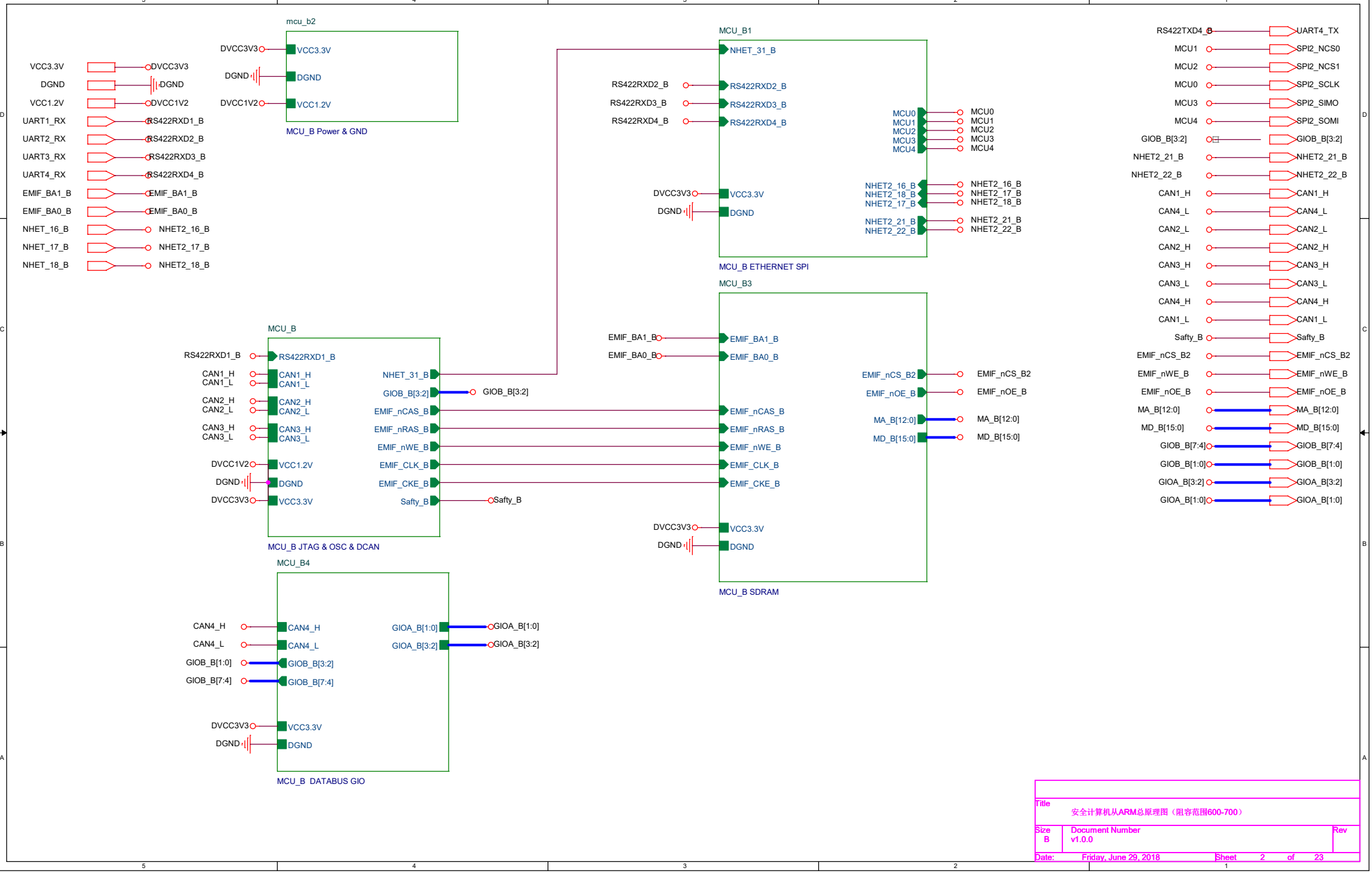

Title	安全计算机从ARM总原理图（阻容范围600-700）	
Size B	Document Number v1.0.0	Rev
Date: Friday, June 29, 2018	Sheet 2 of 23	

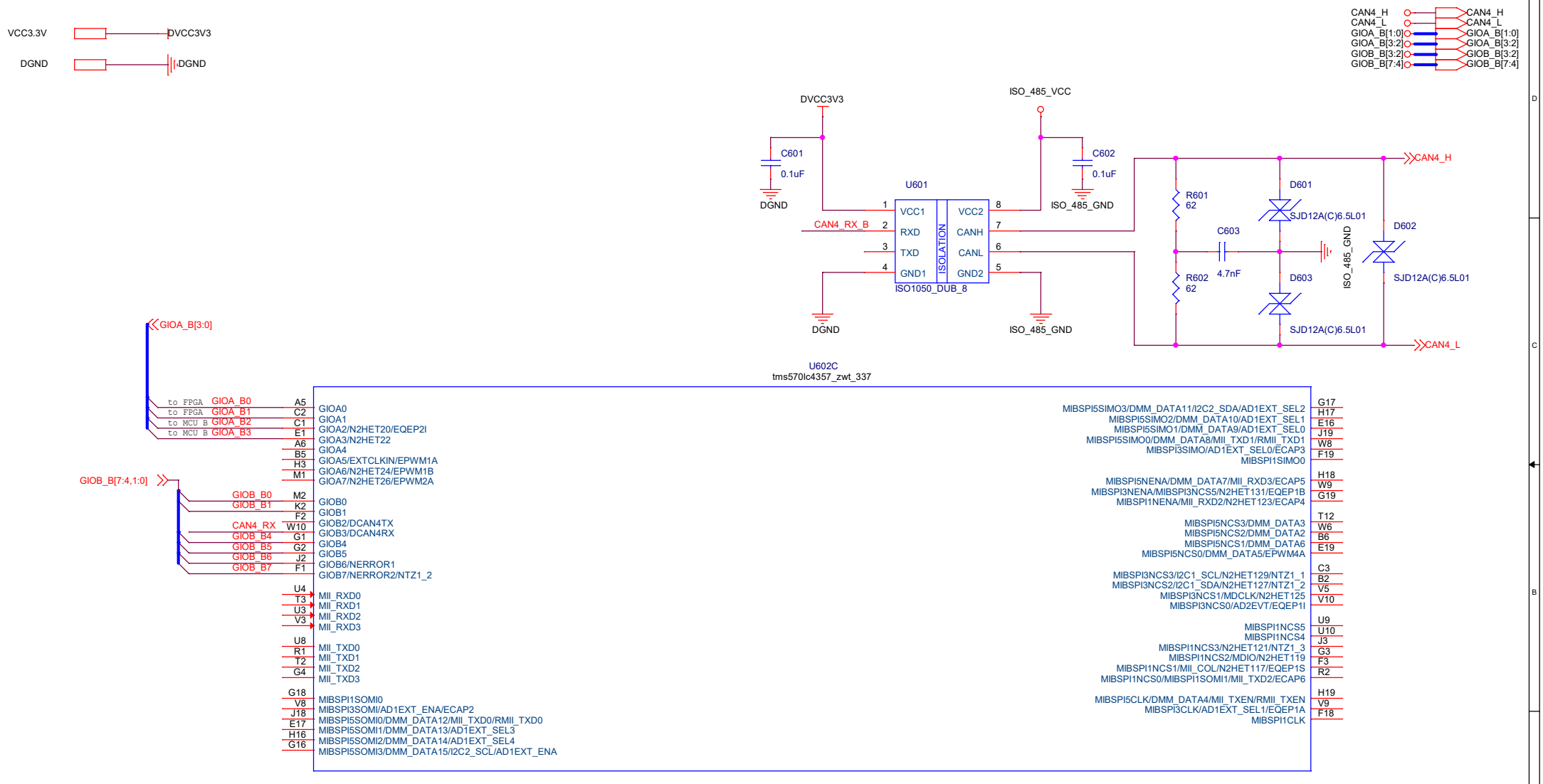

Title	安全计算机从ARM原理图1	
Size B	Document Number v1.0.0	Rev
Date: Friday, June 29, 2018	Sheet 2 of 23	

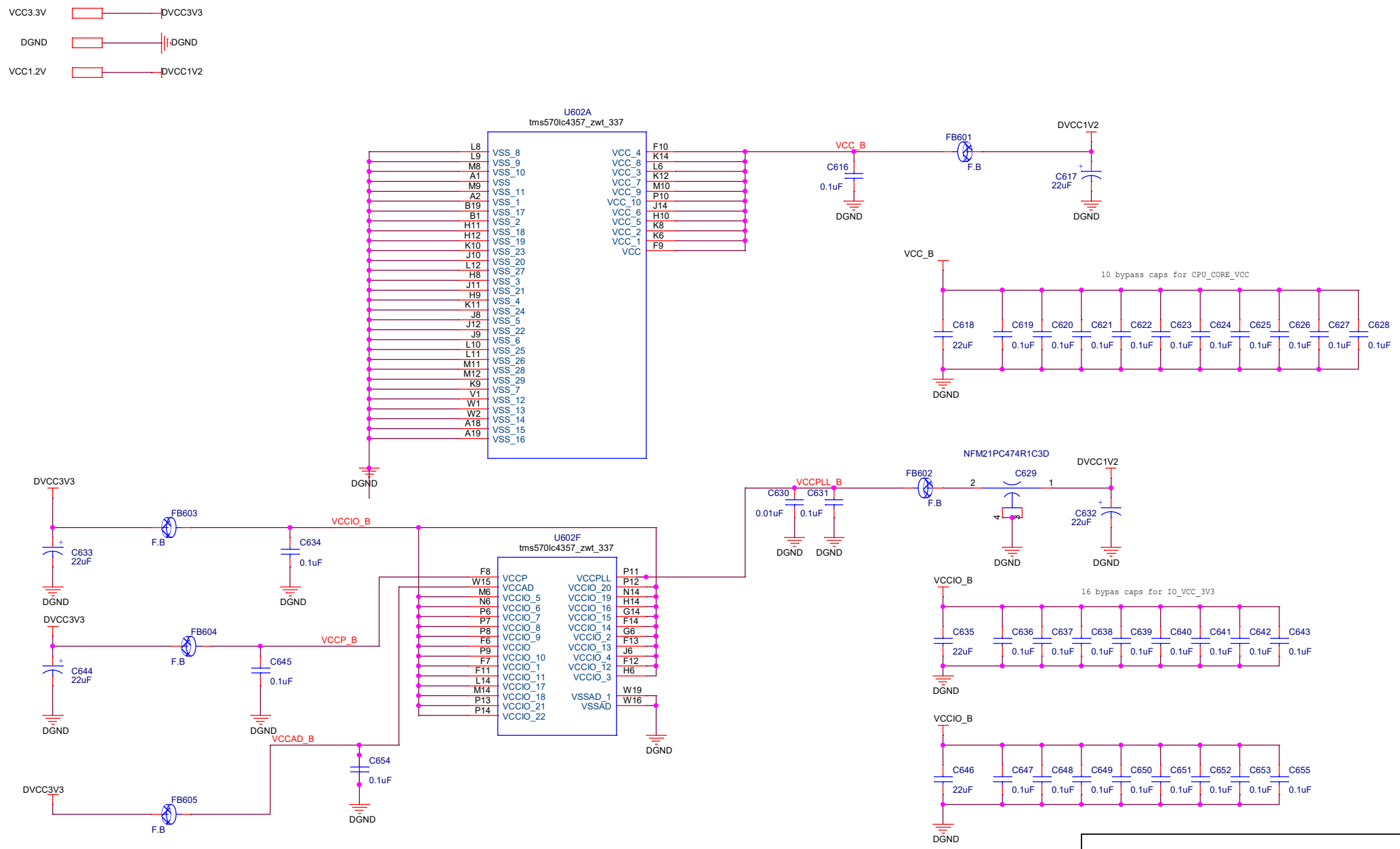

Title	安全计算机从ARM原理图4		
Size B	Document Number v1.0.0		Rev
Date: Friday, June 29, 2018		Sheet 2 of 23	

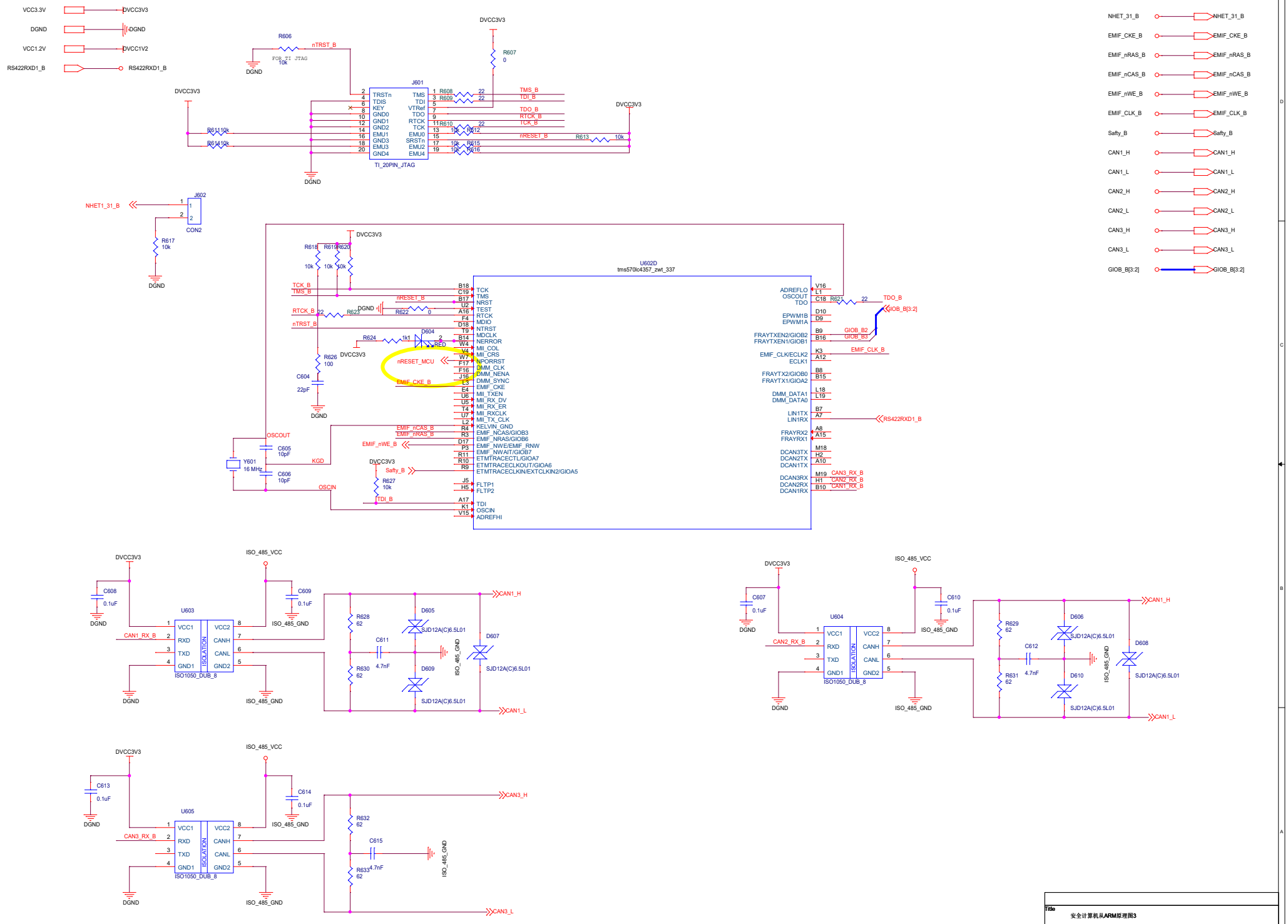

Title	安全计算机从ARM原理图3	
Size C	Document Number v1.0.0	Rev
Date: Friday, June 29, 2018	Sheet 2 of 23	

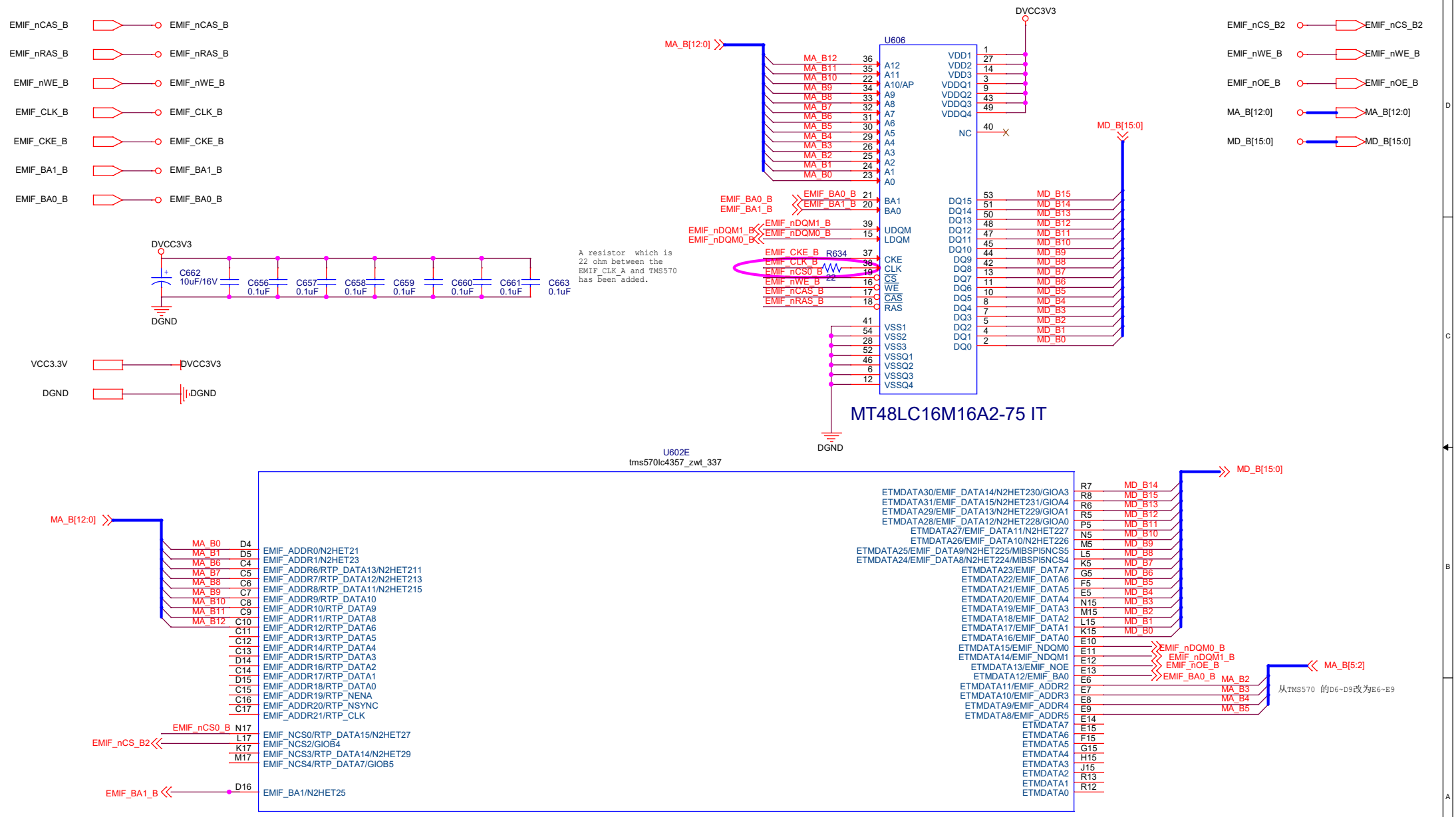

Title	安全计算机从ARM原理图5	
Size B	Document Number v1.0.0	Rev
Date: Friday, June 29, 2018	Sheet 2 of 23	

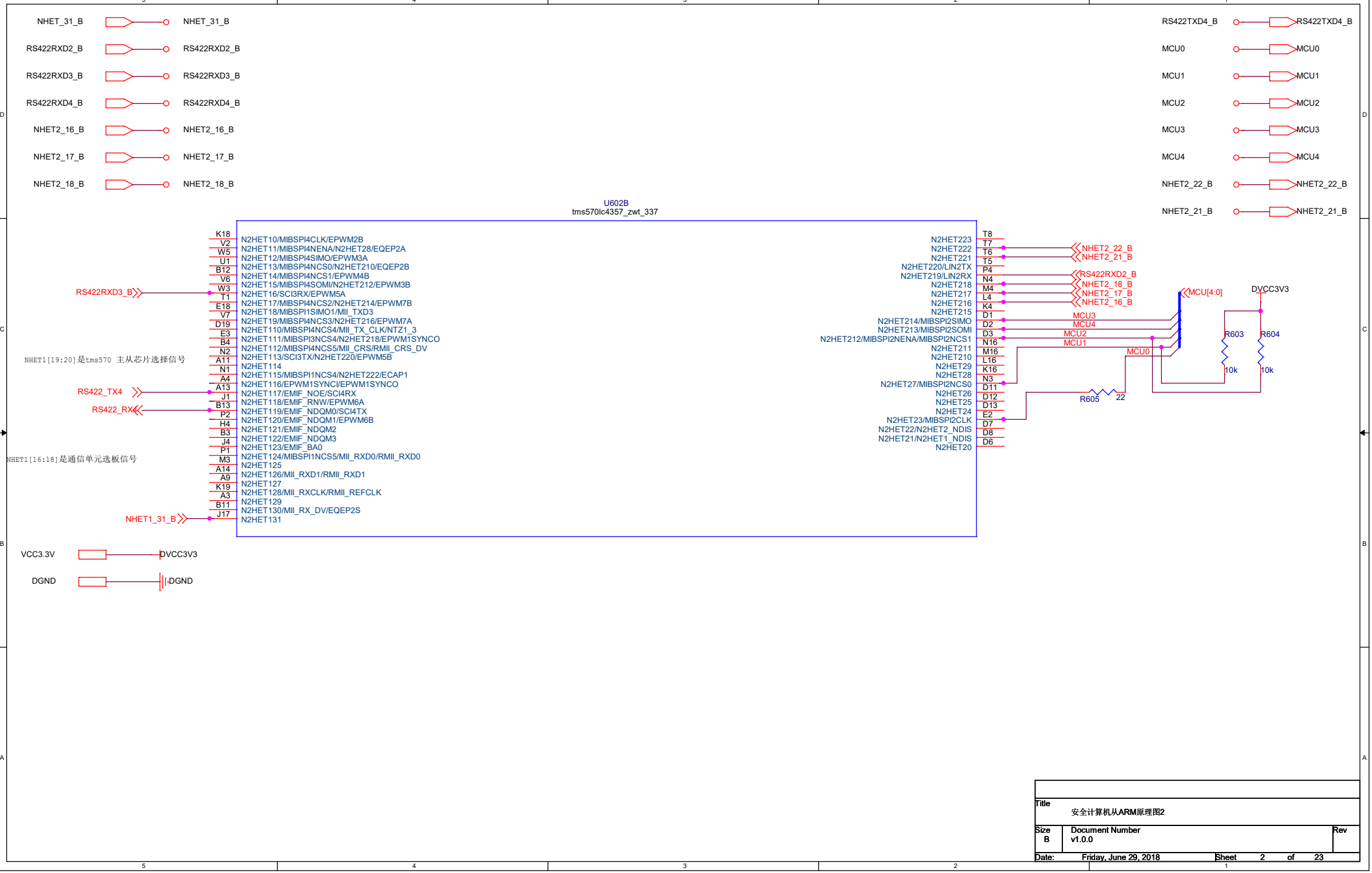

Title	安全计算机从ARM原理图2		
Size B	Document Number v1.0.0		Rev
Date: Friday, June 29, 2018	Sheet 2 of 23		

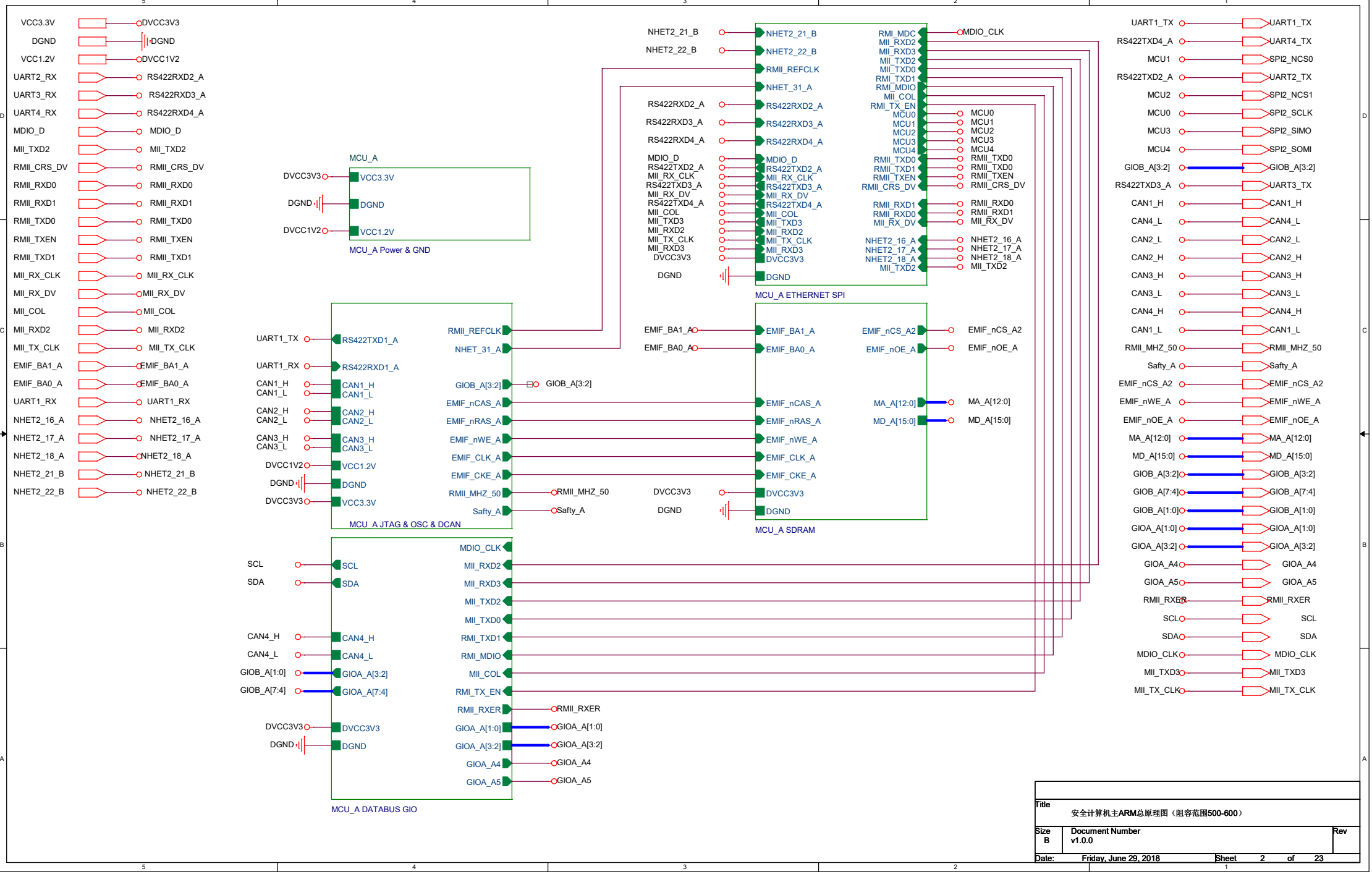

Title	安全计算机主ARM总原理图（阻容范围500-600）	
Size B	Document Number v1.0.0	Rev
Date: Friday, June 29, 2018	Sheet 2 of 23	

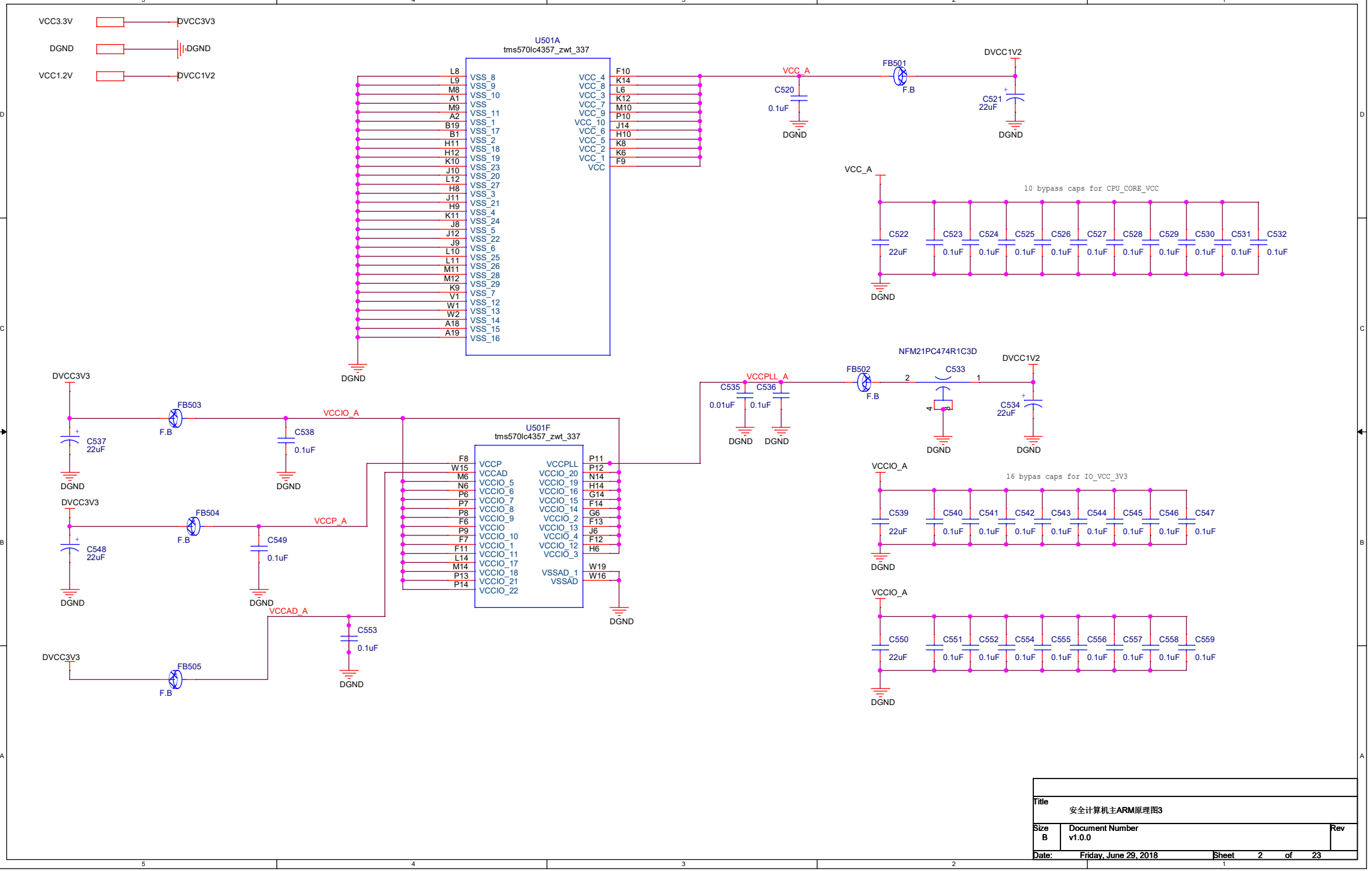

Title	安全计算机主ARM原理图3	
Size B	Document Number v1.0.0	Rev
Date: Friday, June 29, 2018	Sheet 2 of 23	

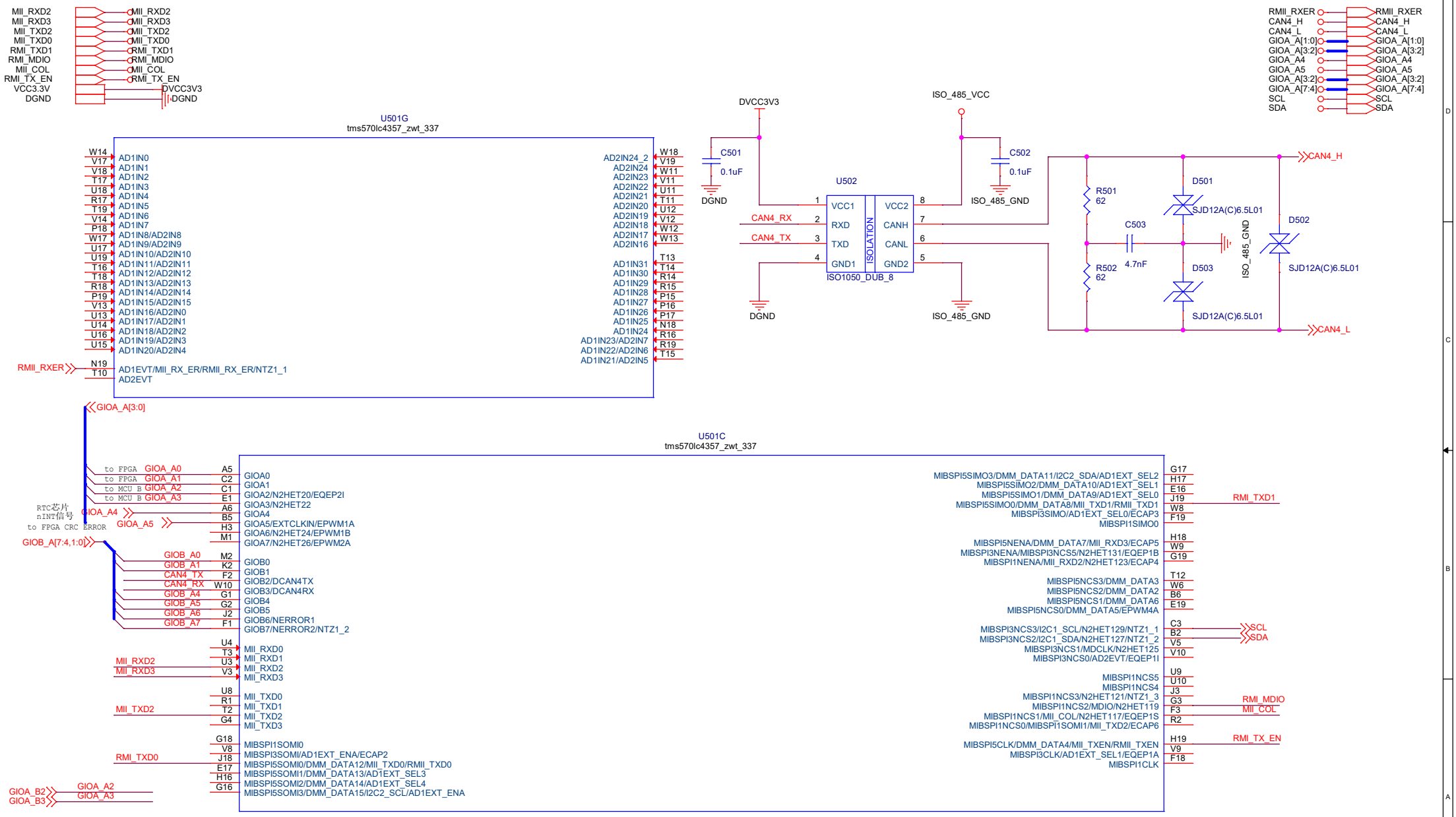

添加处理器间通信IO口

Title	安全计算机ARM原理图1		
Size B	Document Number v1.0.0		Rev
Date: Friday, June 29, 2018		Sheet 2 of 23	

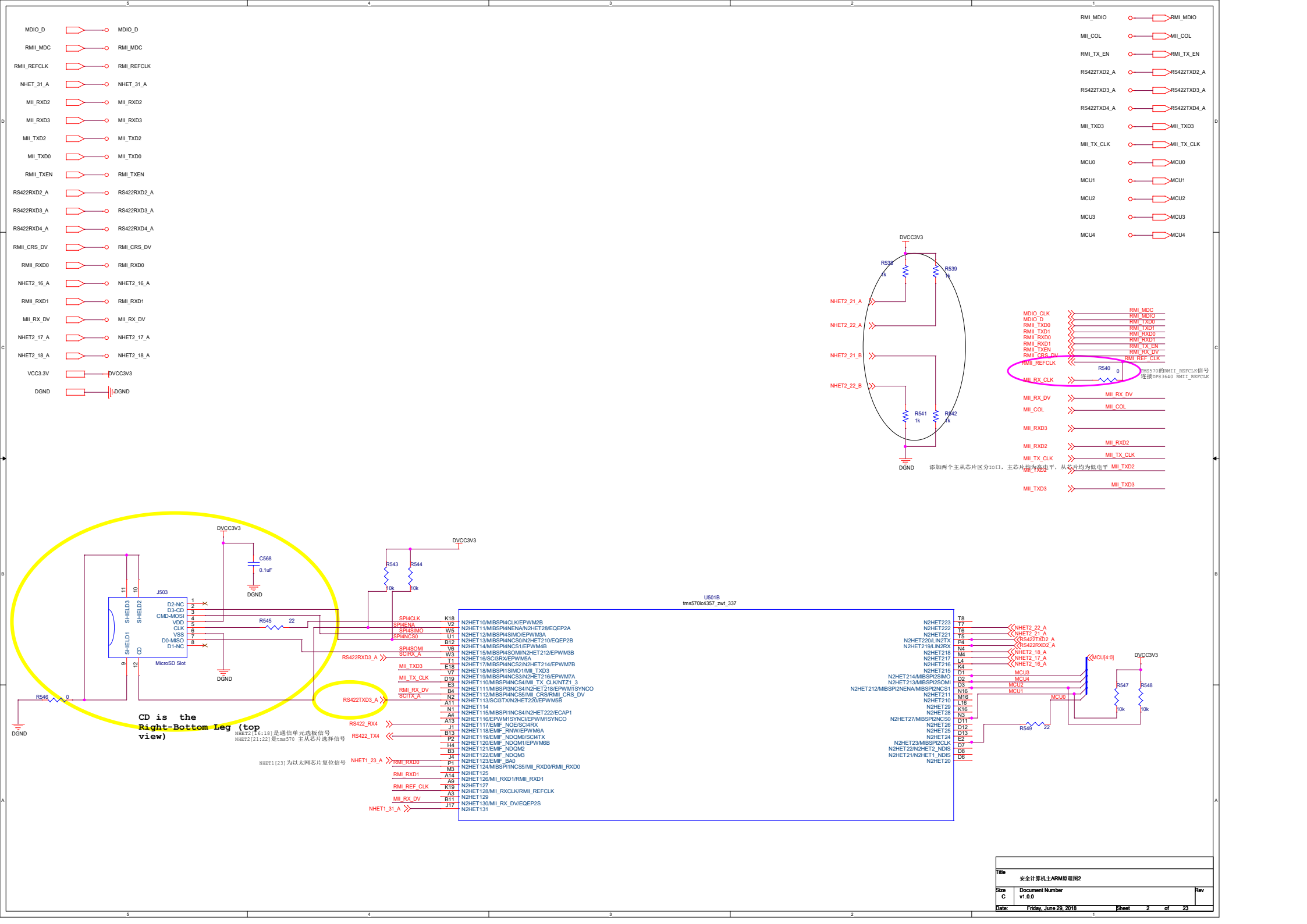
MDIO_D
RMII_MDC
RMII_REFCLK
NHET_31_A
MII_RXD2
MII_RXD3
MII_TXD2
MII_TXD0
RMII_TXEN
RS422RXD2_A
RS422RXD3_A
RS422RXD4_A
RMII_CRS_DV
RMII_RXD0
NHET2_16_A
RMII_RXD1
MII_RX_DV
NHET2_17_A
NHET2_18_A
VCC3.3V
DVCC3V3
DGND
RMI_MDIO
MII_COL
RMI_TX_EN
RS422TXD2_A
RS422TXD3_A
RS422TXD4_A
MII_TXD3
MII_TX_CLK
MCU0
MCU1
MCU2
MCU3
MCU4
R538
1k
R539
1k
NHET2_21_A
NHET2_22_A
NHET2_21_B
NHET2_22_B
R541
1k
R542
1k
MDIO_CLK
RMII_TXD0
RMII_TXD1
RMII_RXD0
RMII_RXD1
RMII_TXEN
RMII_CRS_DV
RMII_REFCLK
MII_RX_CLK
MII_RX_DV
MII_COL
MII_RXD3
MII_RXD2
MII_TX_CLK
MII_TXD2
MII_TXD3
R540
0
TMS570的RMII_REFCLK信号
连接DP83640 RMII_REFCLK
添加两个主从芯片区分IO口，主芯片均为高电平，从芯片均为低电平
J503
D2-NC
D3-CD
CMD-MOSI
VDD
CLK
VSS
D0-MISO
D1-NC
SHELD1
SHELD2
SHELD3
CD
MicroSD Slot
C568
0.1uF
R545
22
R546
0
R543
10k
R544
10k
U501B
tms570lc4357_zwt_337
SPI4CLK
SPI4ENA
SPI4SIMO
SPI4NCS0
SPI4SOMI
SCIRX_A
RS422RXD3_A
MII_TXD3
MII_TX_CLK
RMI_RX_DV
SCITX_A
RS422TXD3_A
RS422_RX4
RS422_TX4
NHET1_23_A
RMI_RXD0
RMI_RXD1
RMI_REF_CLK
MII_RX_DV
NHET1_31_A
N2HET10/MIBSPI4CLK/EPWM2B
N2HET11/MIBSPI4NENA/N2HET28/EQEP2A
N2HET12/MIBSPI4SIMO/EPWM6A
N2HET13/MIBSPI4NCS0/N2HET210/EQEP2B
N2HET14/MIBSPI4NCS1/EPWM4B
N2HET15/MIBSPI4SOMI/N2HET212/EPWM3B
N2HET16/SCI3RX/EPWM5A
N2HET17/MIBSPI4NCS2/N2HET214/EPWM7B
N2HET18/MIBSPI1SIMO1/MII_TXD3
N2HET19/MIBSPI4NCS3/N2HET216/EPWM7A
N2HET110/MIBSPI4NCS4/MII_TX_CLK/NTZ1_3
N2HET111/MIBSPI3NCS4/N2HET218/EPWM1SYNCO
N2HET112/MIBSPI4NCS5/MII_CRS/RMII_CRS_DV
N2HET113/SCI3TX/N2HET220/EPWM5B
N2HET114
N2HET115/MIBSPI1NCS4/N2HET222/ECAP1
N2HET116/EPWM1SYNCI/EPWM1SYNCO
N2HET117/EMIF_NOE/SC3RX
N2HET118/EMIF_RNW/EPWM6A
N2HET119/EMIF_NDQM0/SC4TX
N2HET120/EMIF_NDQM1/EPWM6B
N2HET121/EMIF_NDQM2
N2HET122/EMIF_NDQM3
N2HET123/EMIF_BA0
N2HET124/MIBSPI1NCS5/MII_RXD0/RMII_RXD0
N2HET125
N2HET126/MII_RXD1/RMII_RXD1
N2HET127
N2HET128/MII_RXCLK/RMII_REFCLK
N2HET129
N2HET130/MII_RX_DV/EQEP2S
N2HET131
N2HET223
N2HET222
N2HET221
N2HET220/LIN2TX
N2HET219/LIN2RX
N2HET218
N2HET217
N2HET216
N2HET215
N2HET214/MIBSPI2SIMO
N2HET213/MIBSPI2SOMI
N2HET212/MIBSPI2NENA/MIBSPI2NCS1
N2HET211
N2HET210
N2HET29
N2HET28
N2HET27/MIBSPI2NCS0
N2HET26
N2HET25
N2HET24
N2HET23/MIBSPI2CLK
N2HET22/N2HET2_NDIS
N2HET21/N2HET1_NDIS
N2HET20
NHET2_22_A
NHET2_21_A
RS422TXD2_A
RS422RXD2_A
NHET2_18_A
NHET2_17_A
NHET2_16_A
MCU3
MCU4
MCU2
MCU1
MCU0
MCU[4:0]
R547
10k
R548
10k
R549
22
CD is the Right-Bottom Leg (top view)
NHET2[16:18]是通信单元选板信号
NHET2[21:22]是tms570 主从芯片选择信号
NHET1[23]为以太网芯片复位信号
Title
安全计算机主ARM原理图2
Size
C
Document Number
v1.0.0
Rev
Date: Friday, June 29, 2018
Sheet 2 of 23

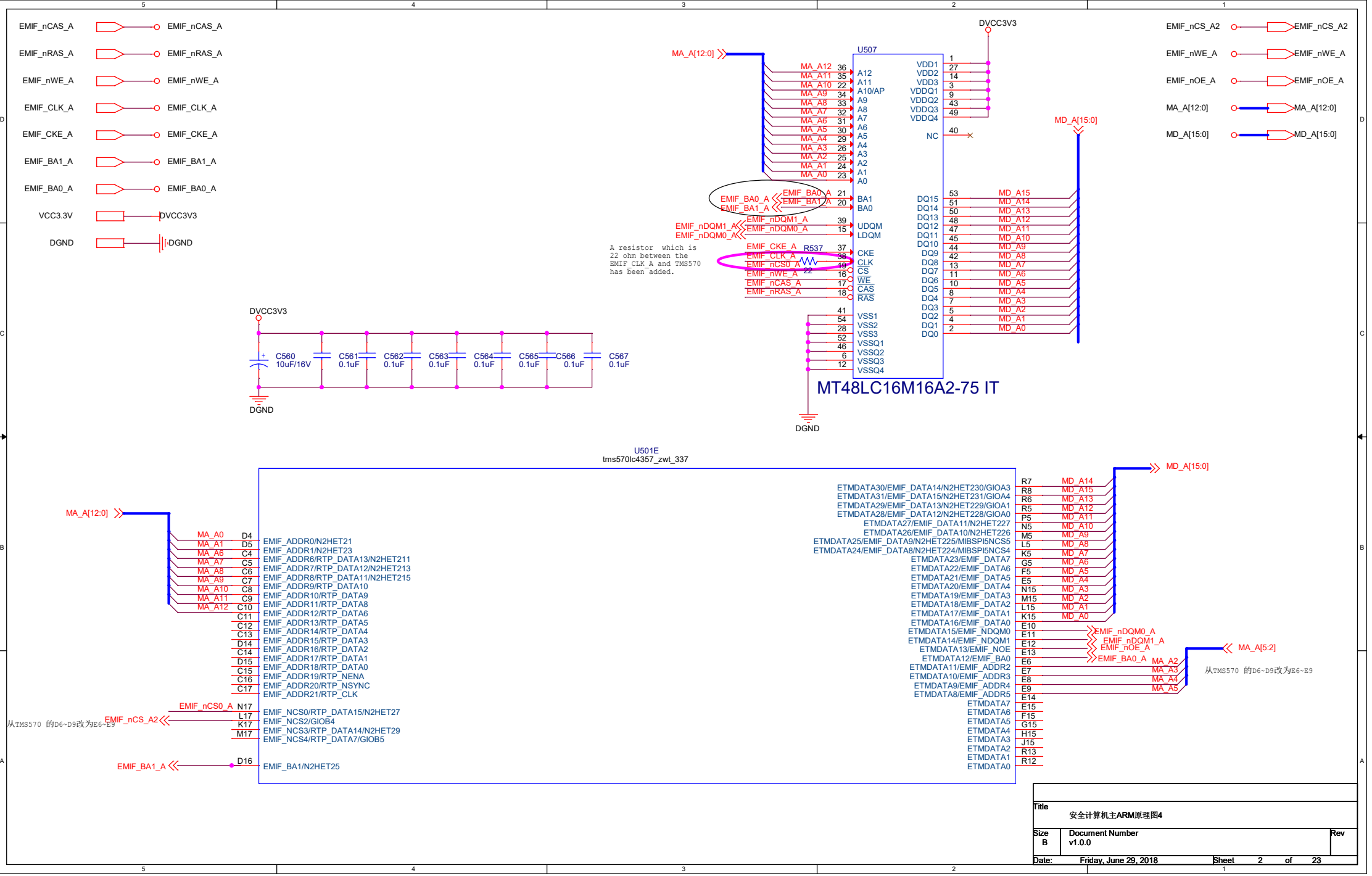

Title: 安全计算机主ARM原理图4

Size: B | Document Number: v1.0.0 | Rev

Date: Friday, June 29, 2018 | Sheet 2 of 23

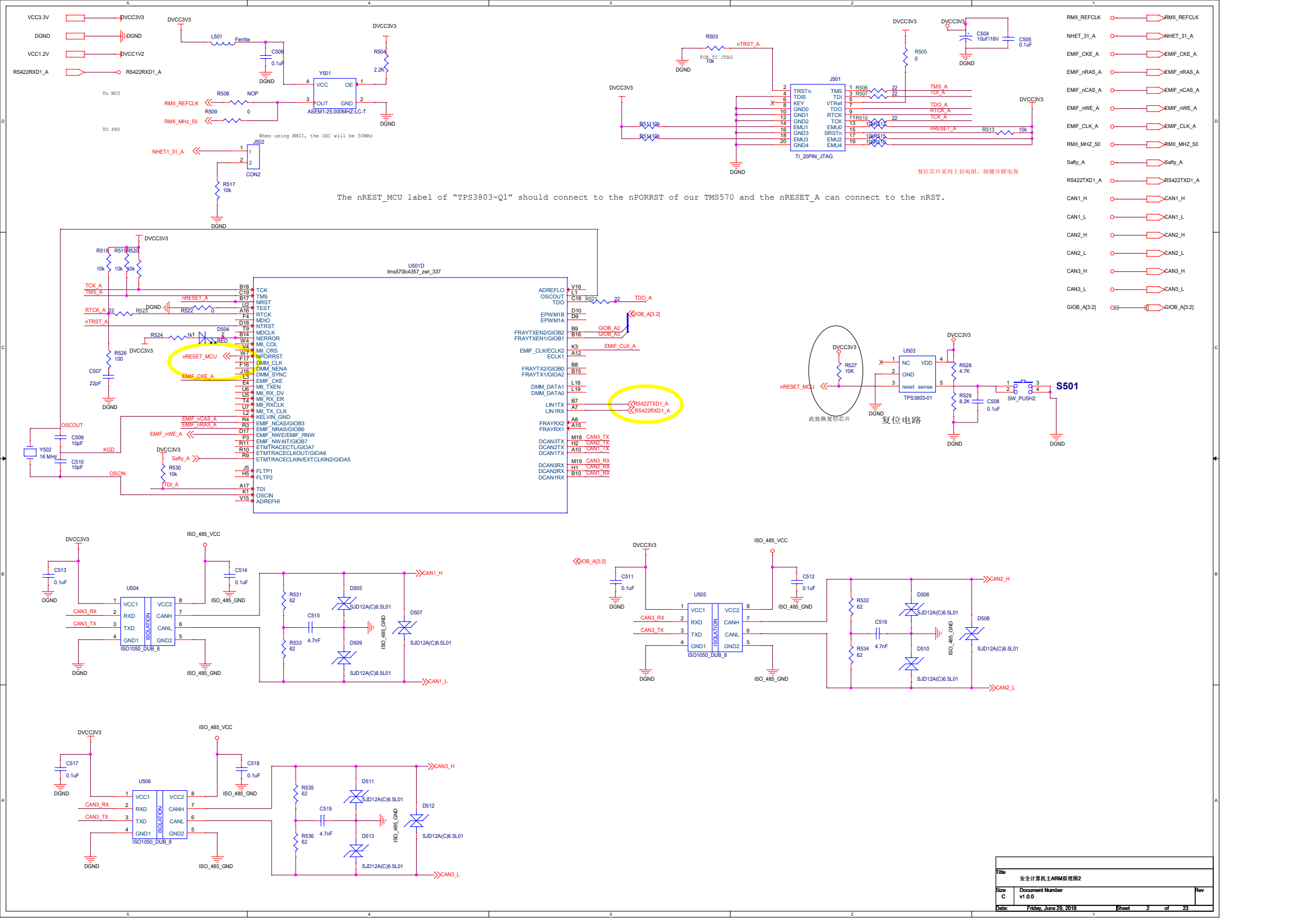

Title	安全计算机主ARM原理图2	
Size C	Document Number v1.0.0	Rev
Date: Friday, June 29, 2018	Sheet 2 of 23	

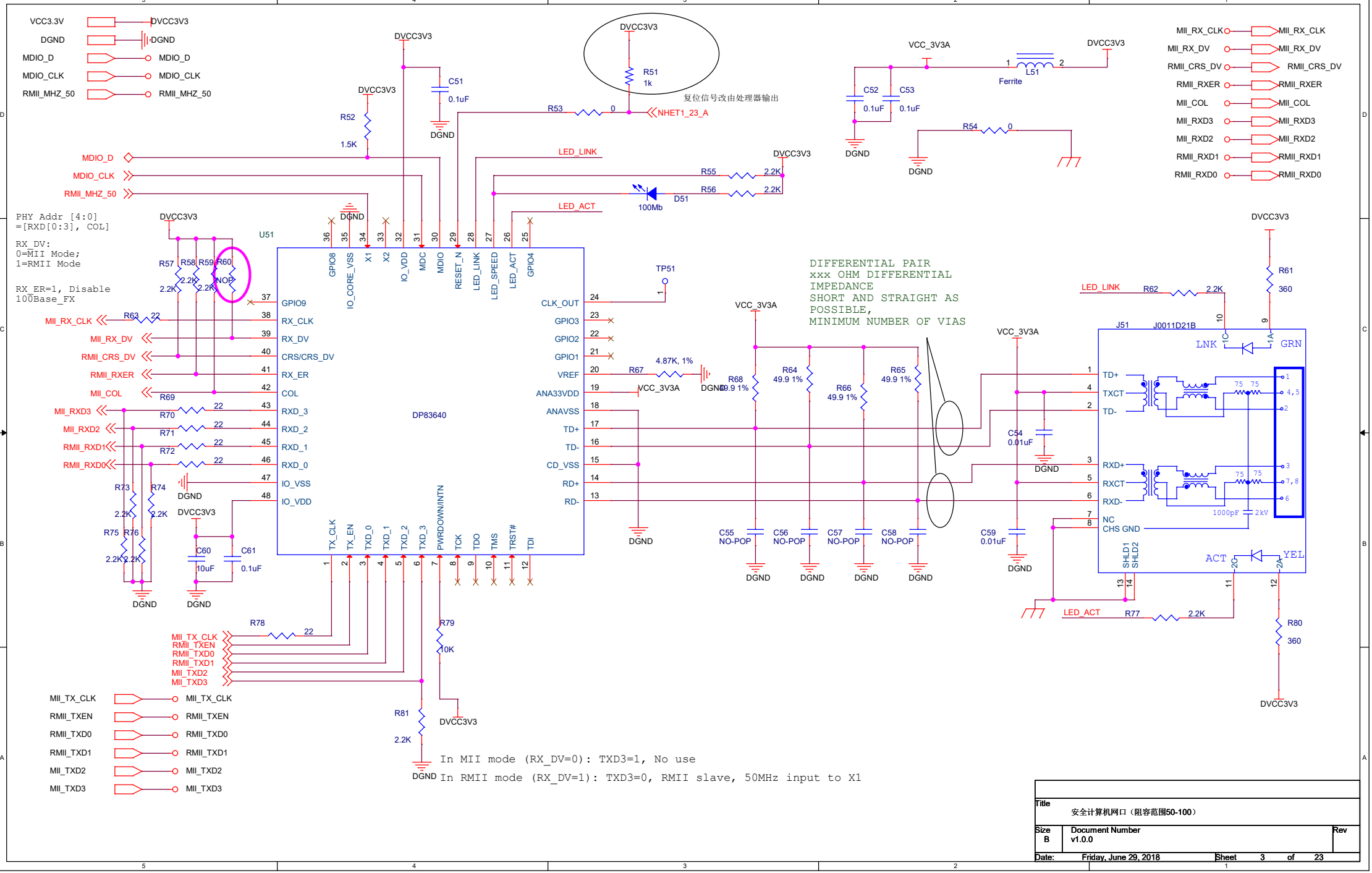

Title	安全计算机网口（阻容范围50-100）	
Size B	Document Number v1.0.0	Rev
Date: Friday, June 29, 2018	Sheet 3 of 23	

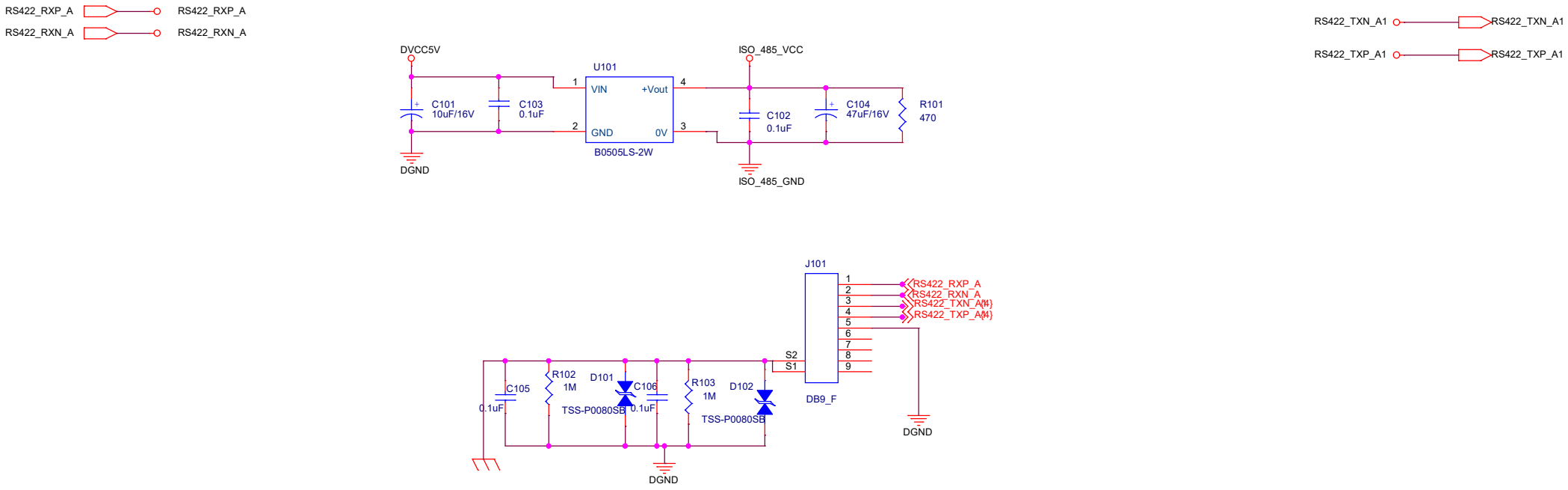

Title	安全计算机前端口（阻容范围100-150）		
Size B	Document Number v1.0.0		Rev
Date: Friday, June 29, 2018	Sheet 8 of 23		

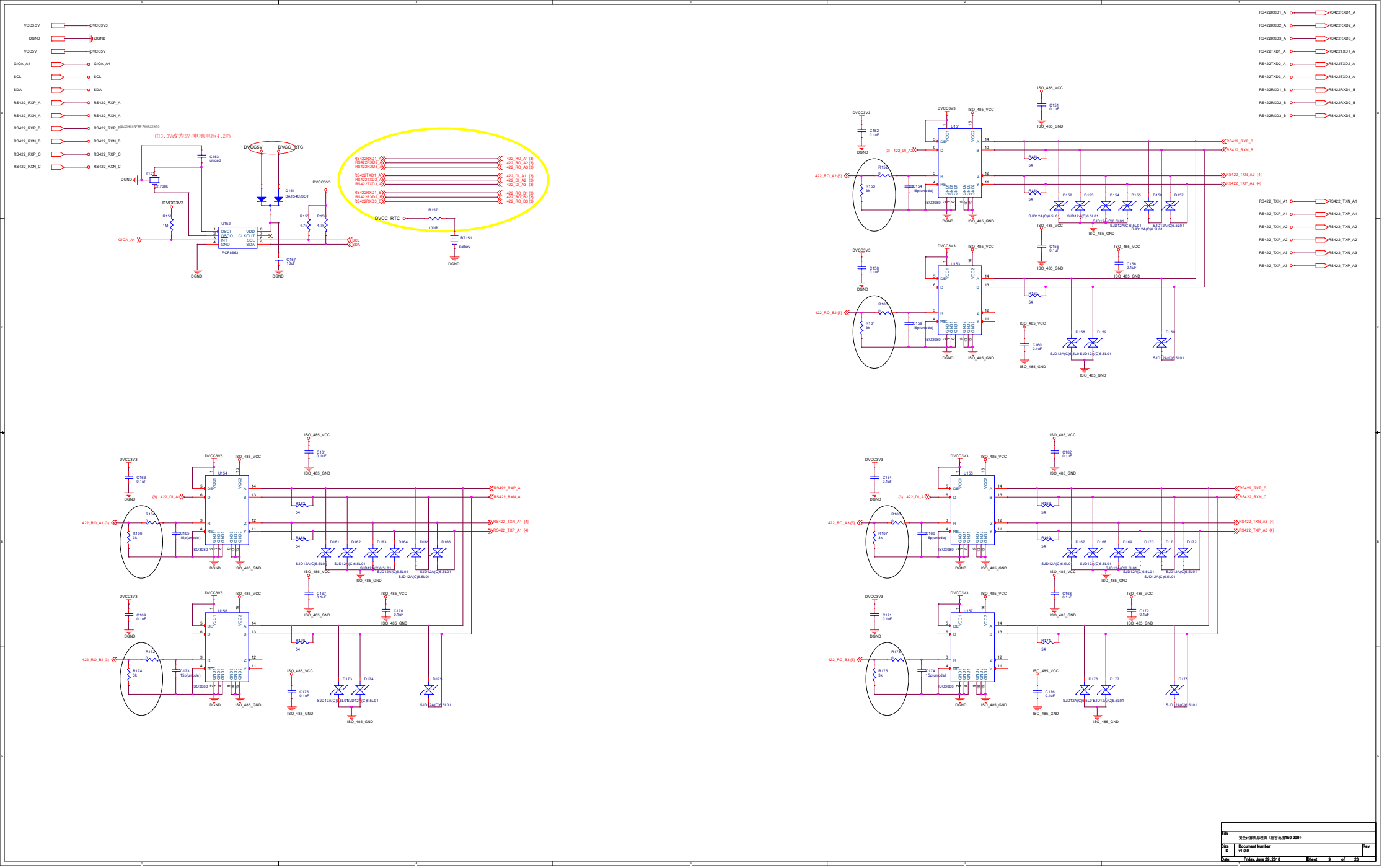

Title	安全计算机联理图（服容器国150-200）
Size D	Document Number v1.0.0
Rev	
Date: Friday, June 29, 2018	Sheet 9 of 23

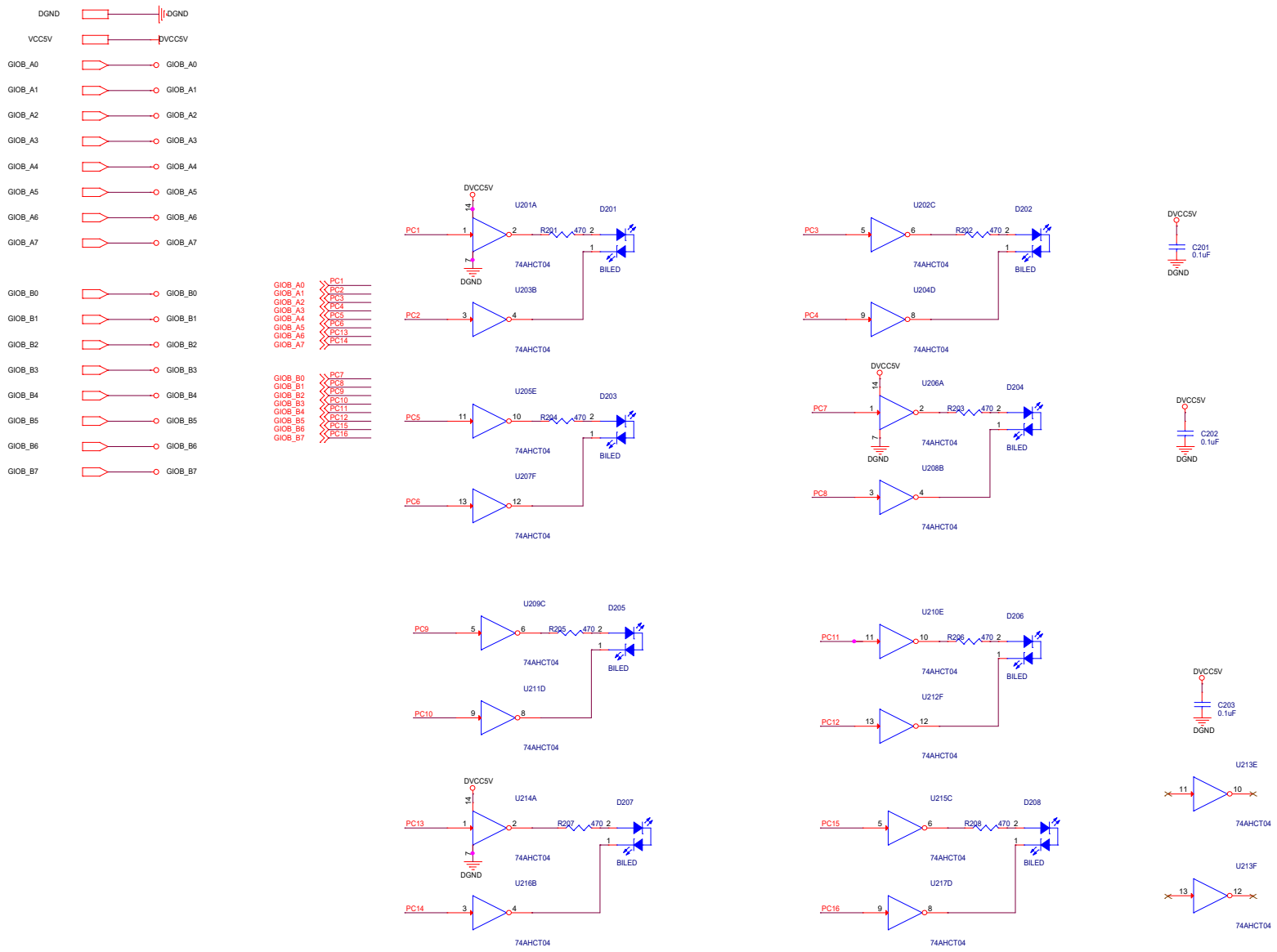

Title	安全计算机led原理图（阻容范围200-250）	
Size C	Document Number v1.0.0	Rev
Date: Friday, June 29, 2018	Sheet 10 of 23	

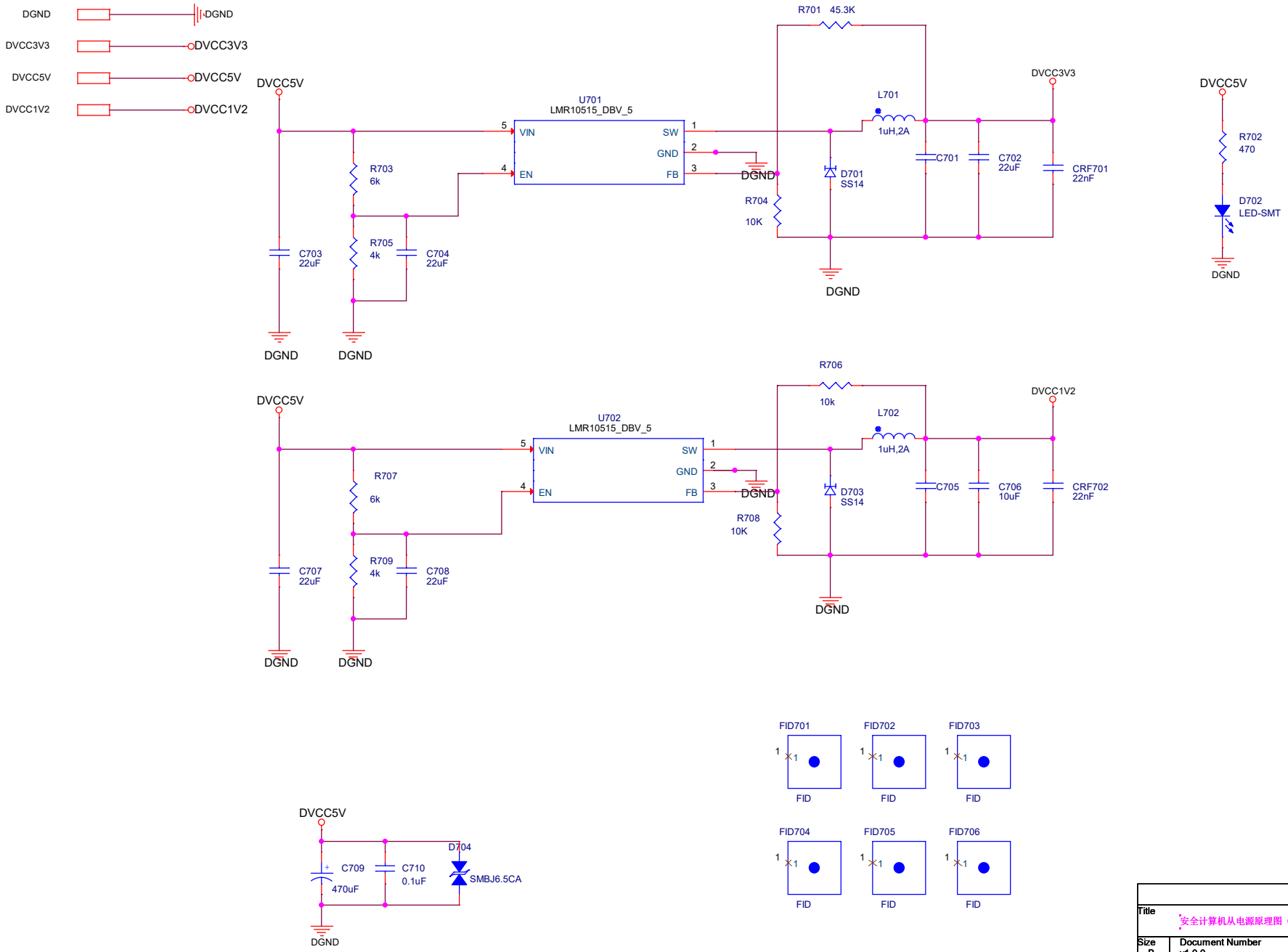

Title	安全计算机从电源原理图（阻容范围700-800）	
Size B	Document Number v1.0.0	Rev
Date: Friday, June 29, 2018	Sheet 2 of 23	