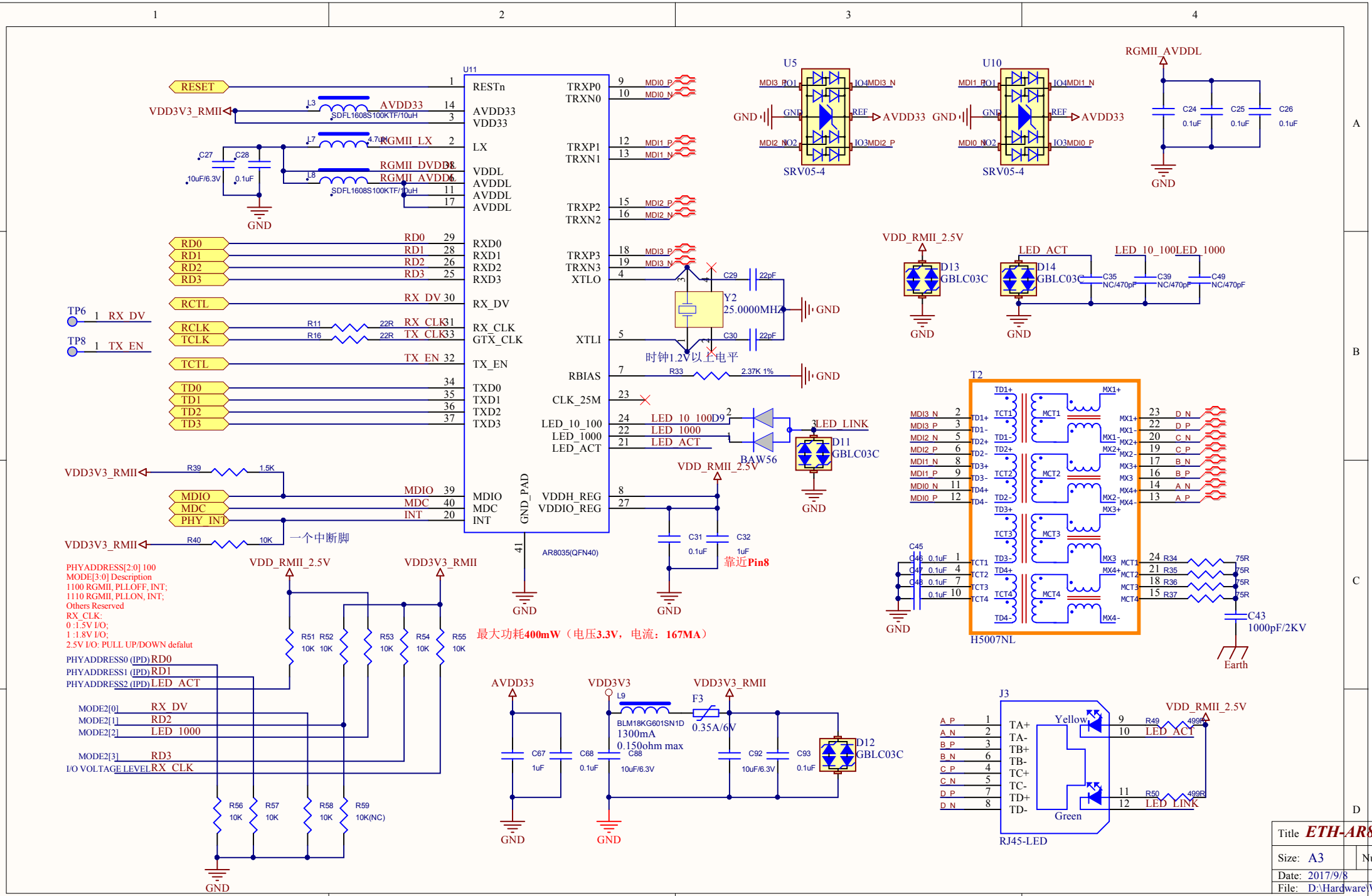

Title	ETH-AR80
Size: A3	Num
Date: 2017/9/8	
File: D:\Hardware\W	