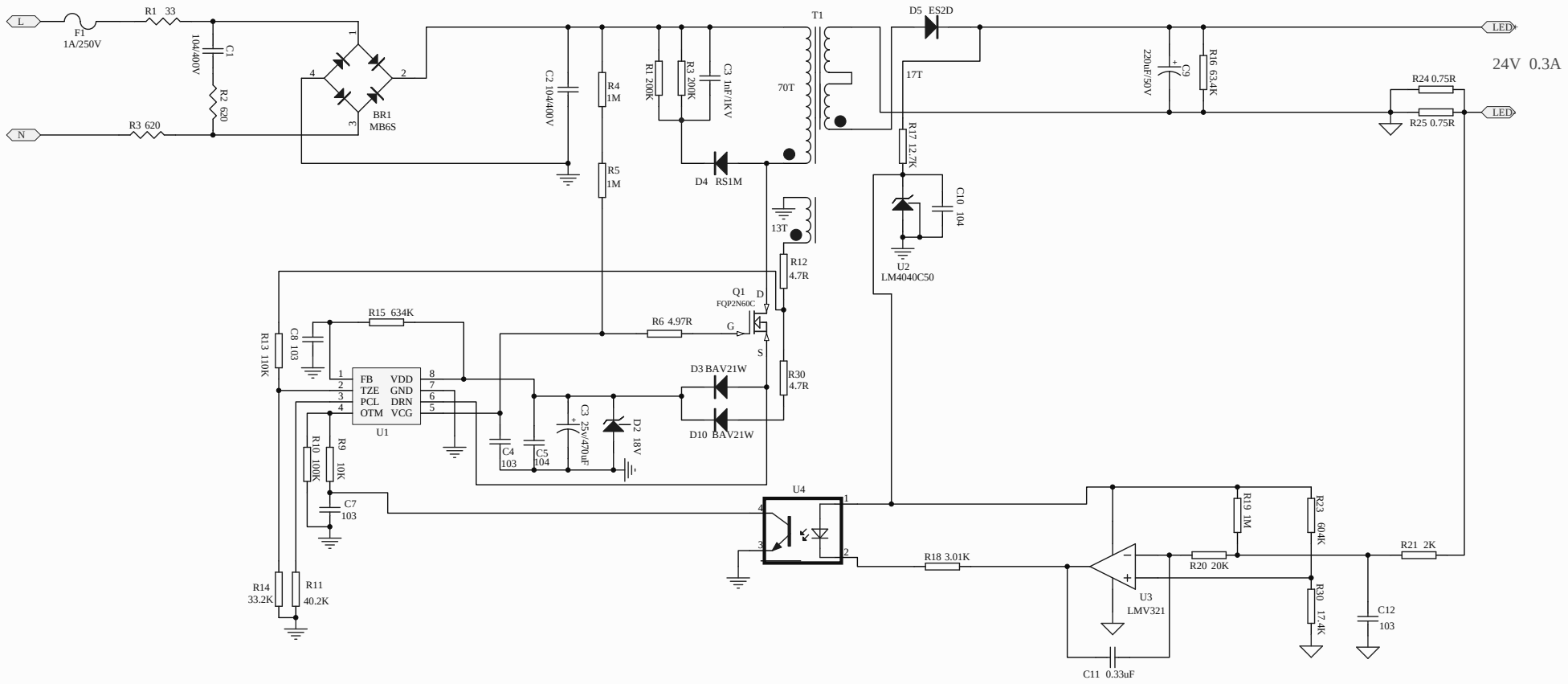

Title		
Size B	Number	Revision
Date: 2012-03-31	Sheet of	
File: C:\Documents and Settings\..\9W球泡灯.Sch	Drawn By:	