DDR2 VCC 1.8V

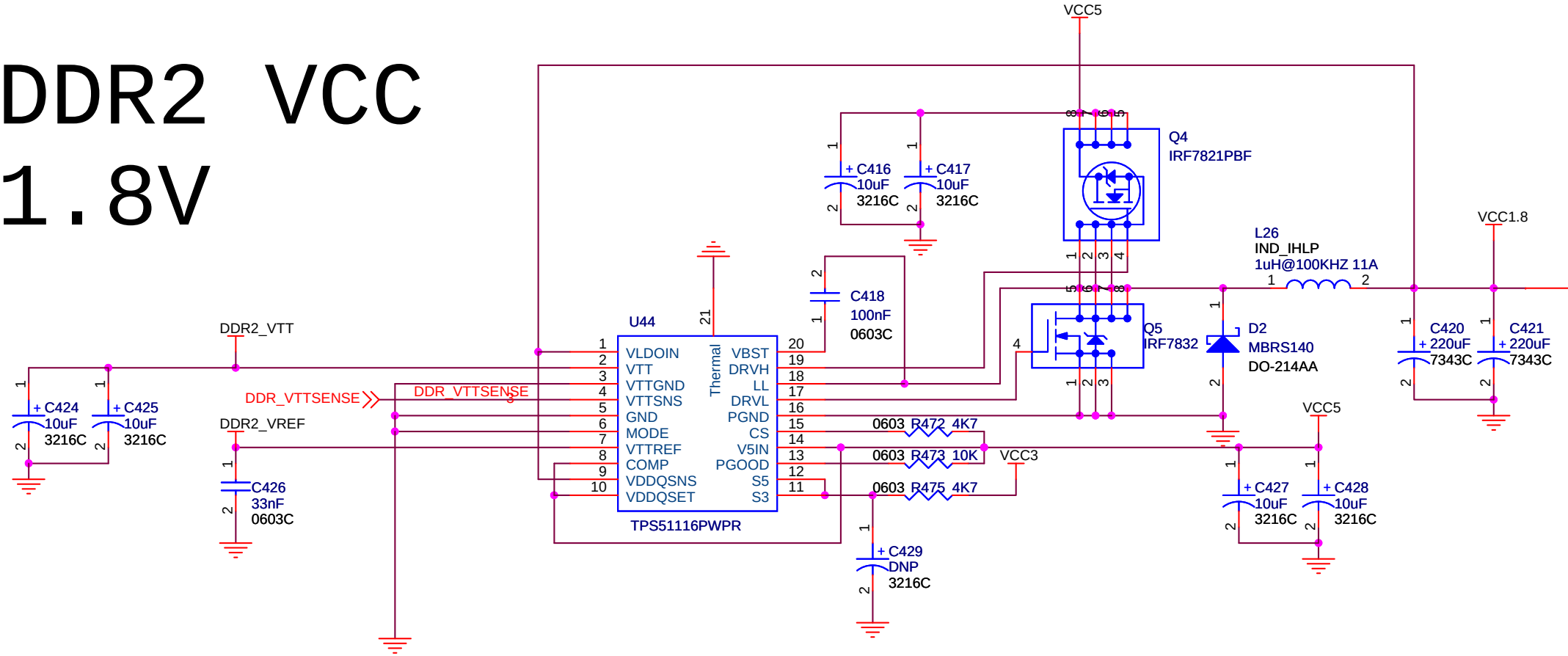
VCC5
Q4
IRF7821PBF
C416
10uF
3216C
C417
10uF
3216C
VCC1.8
L26
IND_IHLP
1uH@100KHZ 11A
C418
100nF
0603C
U44
DDR2_VTT
Q5
IRF7832
D2
MBRS140
DO-214AA
C420
220uF
7343C
C421
220uF
7343C
VLDOIN
VTT
VTTGND
VTTSNS
GND
MODE
VTTREF
COMP
VDDQSNS
VDDQSET
Thermal
VBST
DRVH
LL
DRVL
PGND
CS
V5IN
PGOOD
S5
S3
TPS51116PWPR
DDR_VTTSENSE
DDR_VTTSENSE
DDR2_VREF
C424
10uF
3216C
C425
10uF
3216C
C426
33nF
0603C
0603 R472 4K7
0603 R473 10K
0603 R475 4K7
VCC3
VCC5
C427
10uF
3216C
C428
10uF
3216C
C429
DNP
3216C