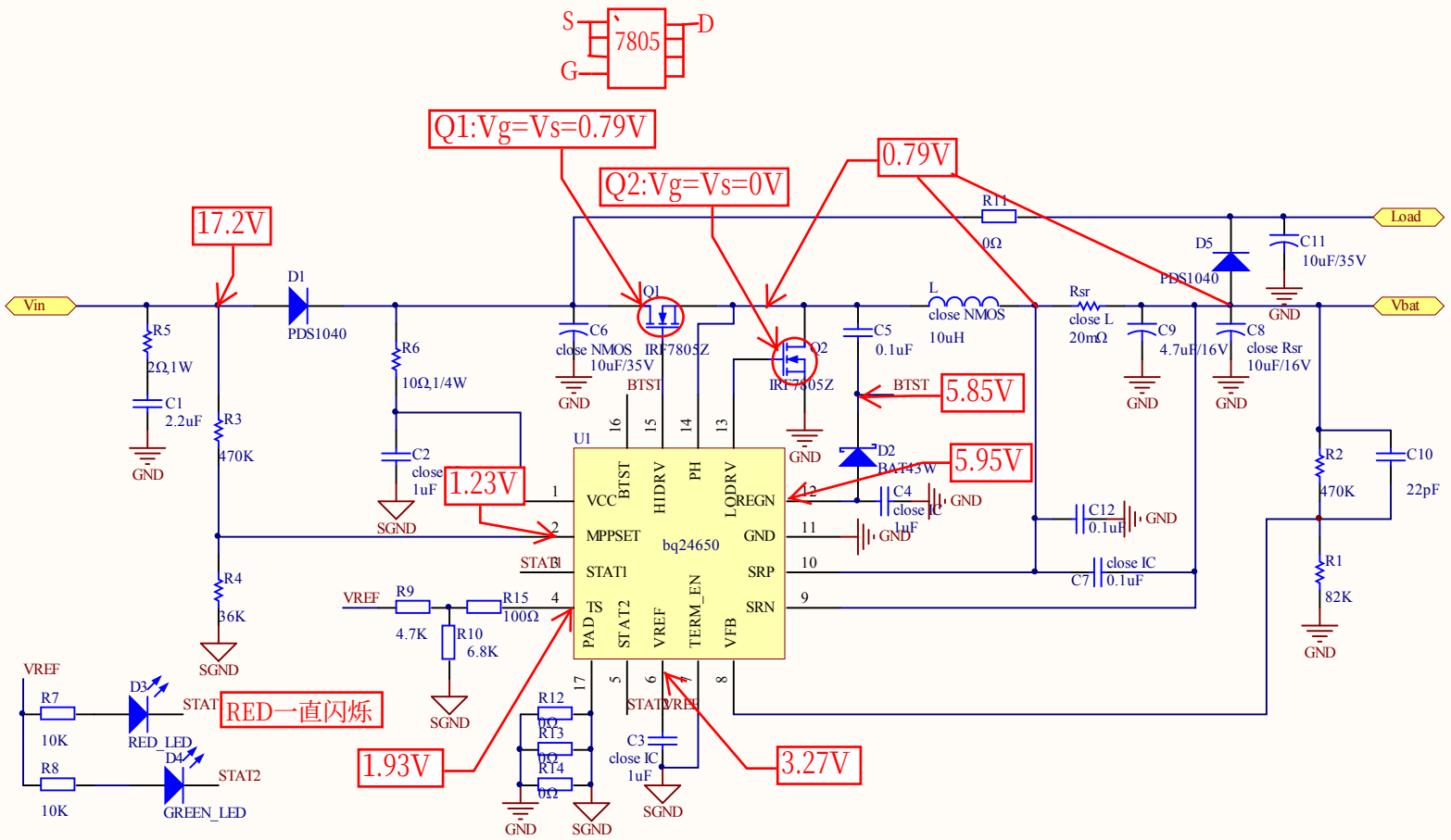

Title		
Size A4	Number	Revision
Date: 2012-12-29		Sheet of
File: D:\ \..\SolarCharger.SCHDOC		