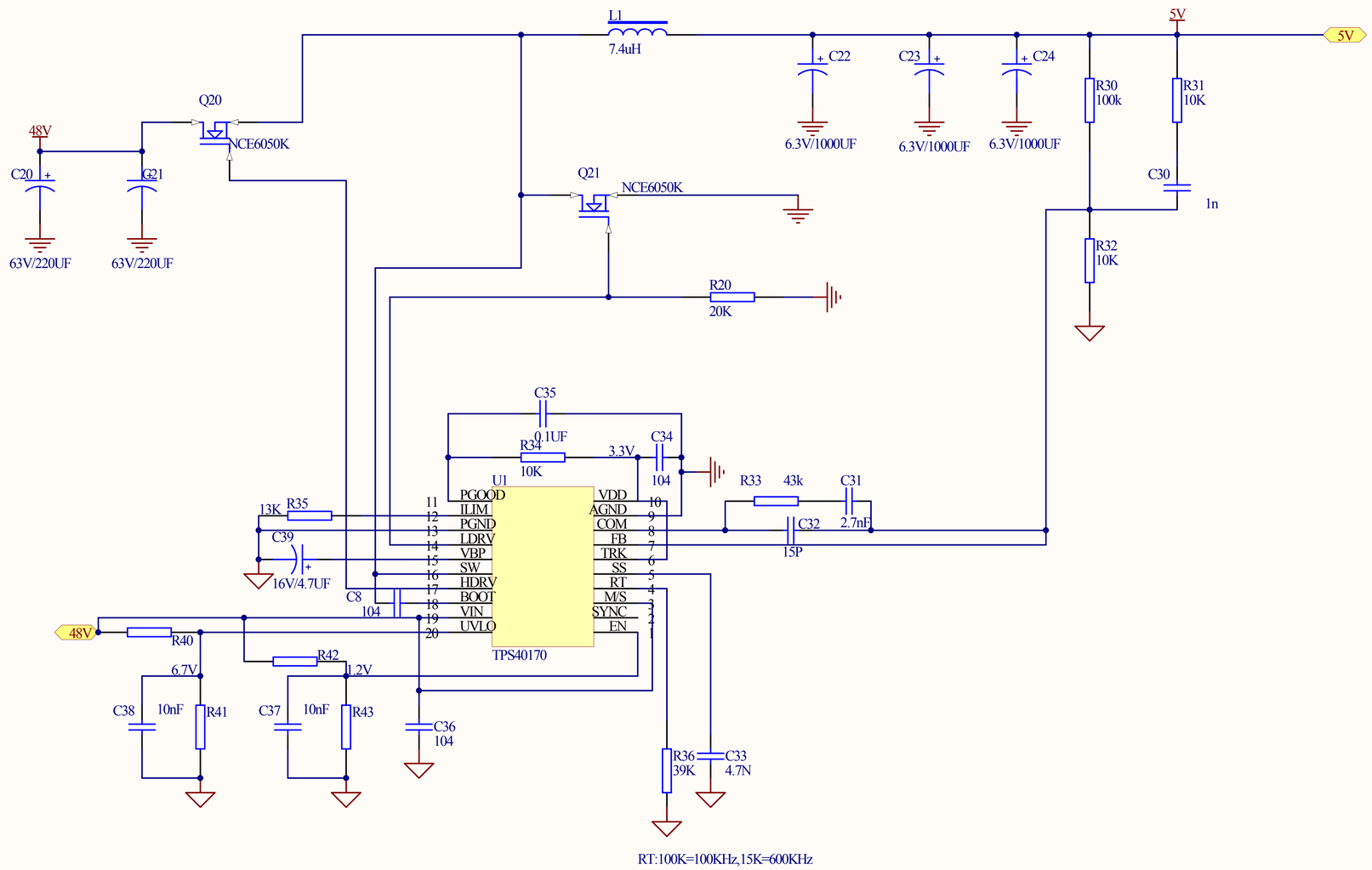

Title		
Size B	Number	Revision
Date: 2013/3/11		Sheet of
File: H:\ \..\Sheet1.Sch		Drawn By: