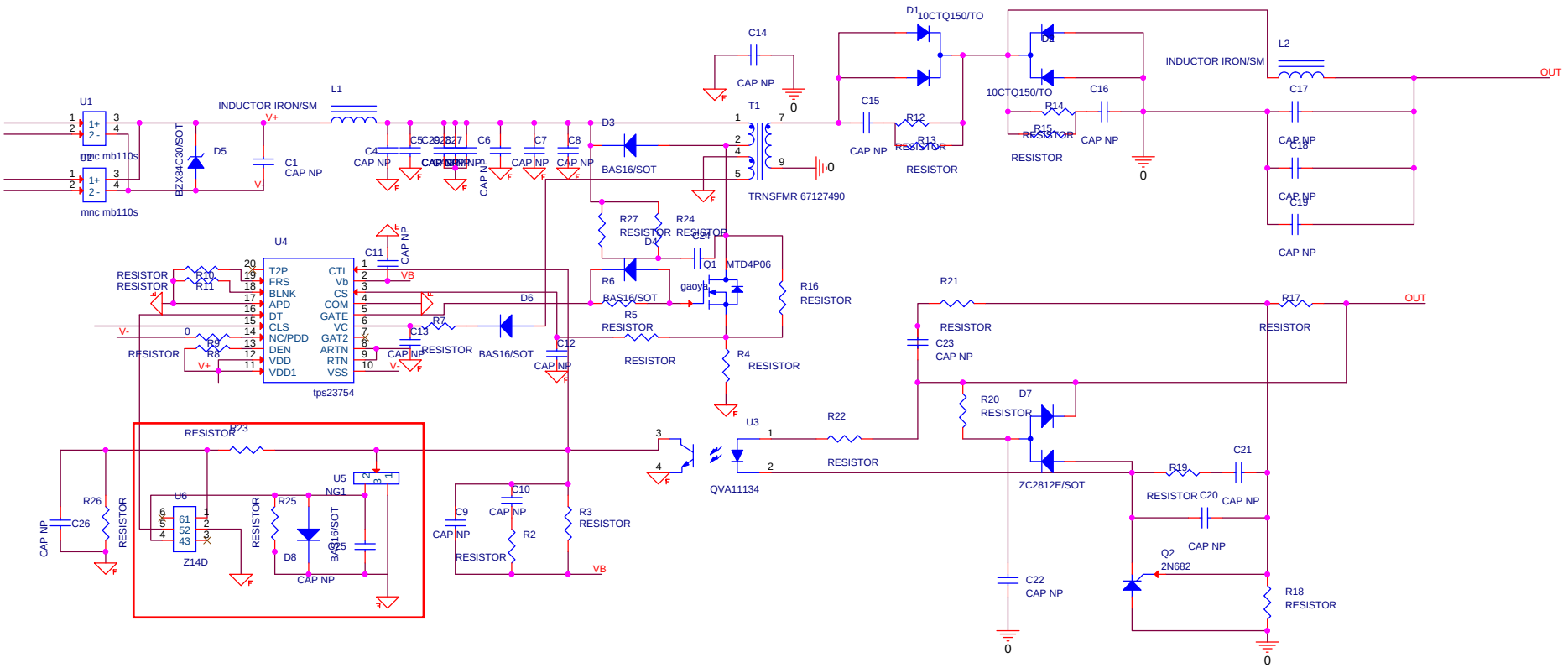

Title <Title>		
Size A3	Document Number <Doc>	Rev <RevCod
Date: Tuesday, April 09, 2013	Sheet 1 of 1	