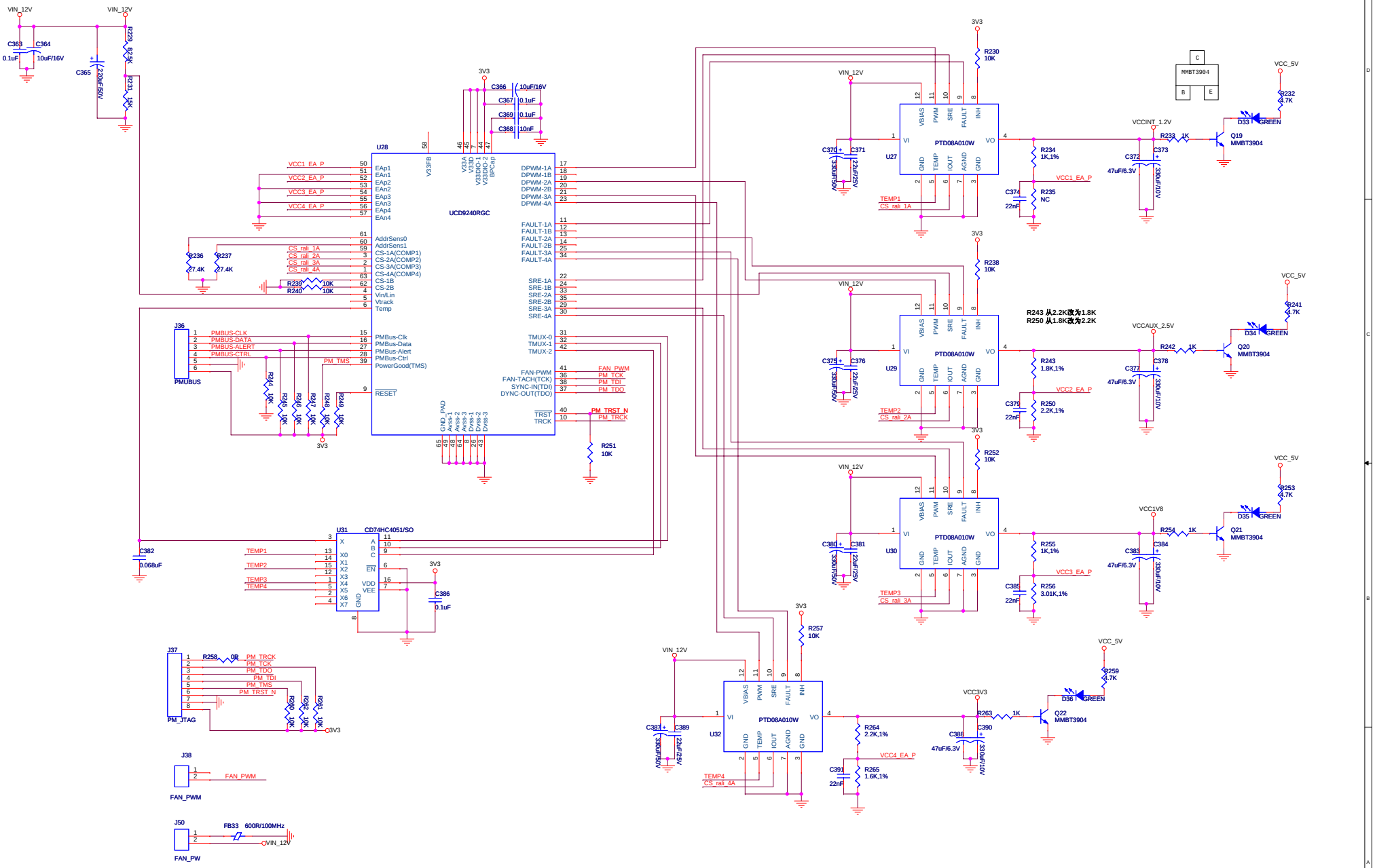

Title	Power Management Unit 1	
Size C	Document Number SP6Develop-LX150-SCH	Rev 1.10
Date: Monday, April 08, 2013	Sheet 17 of 19	