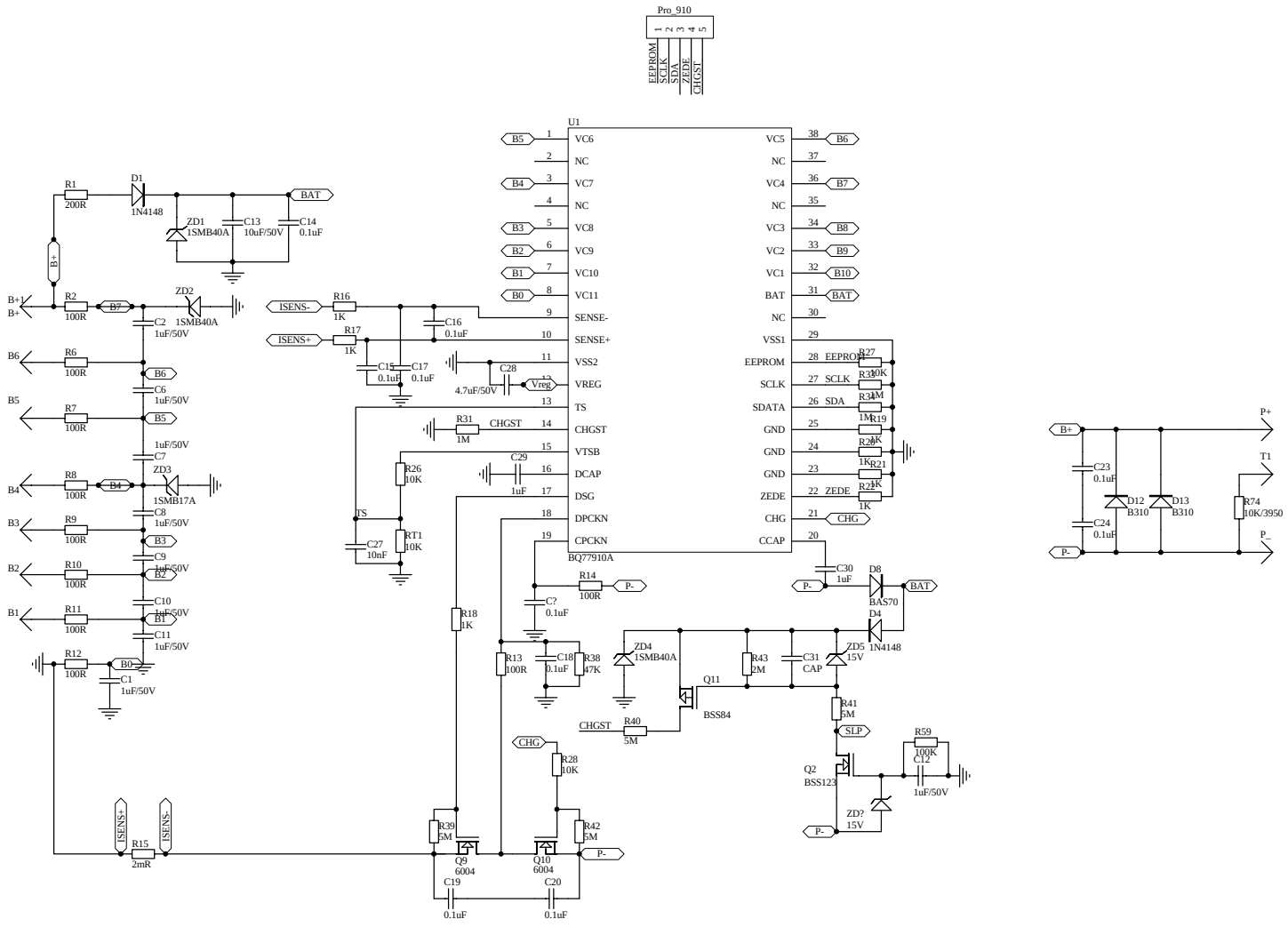

Title			
Size A3	Number		Revision
Date: 26-Jun-2013		Sheet of	
File: D:\NEW-Project\Lishenkaidi\冯电路设计\冯.Drawn By:			