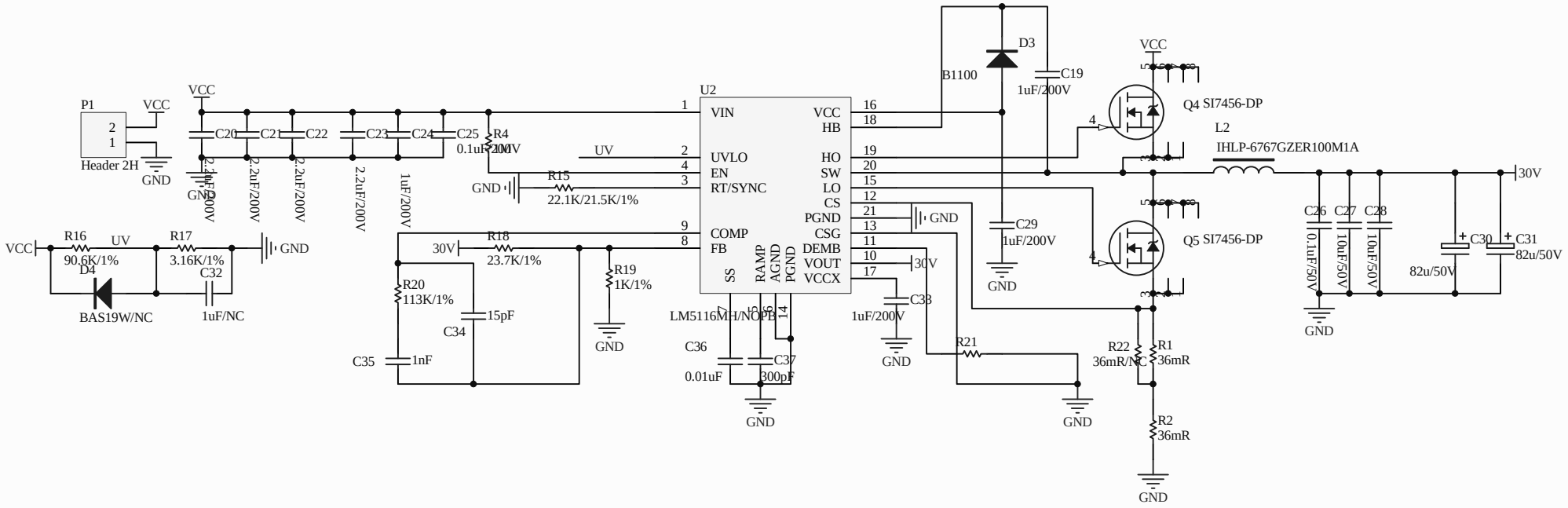

Title		
Size A4	Number	Revision
Date: 2014/1/21		Sheet of
File: D:\projects\..\Sheet1.SchDoc		Drawn By: