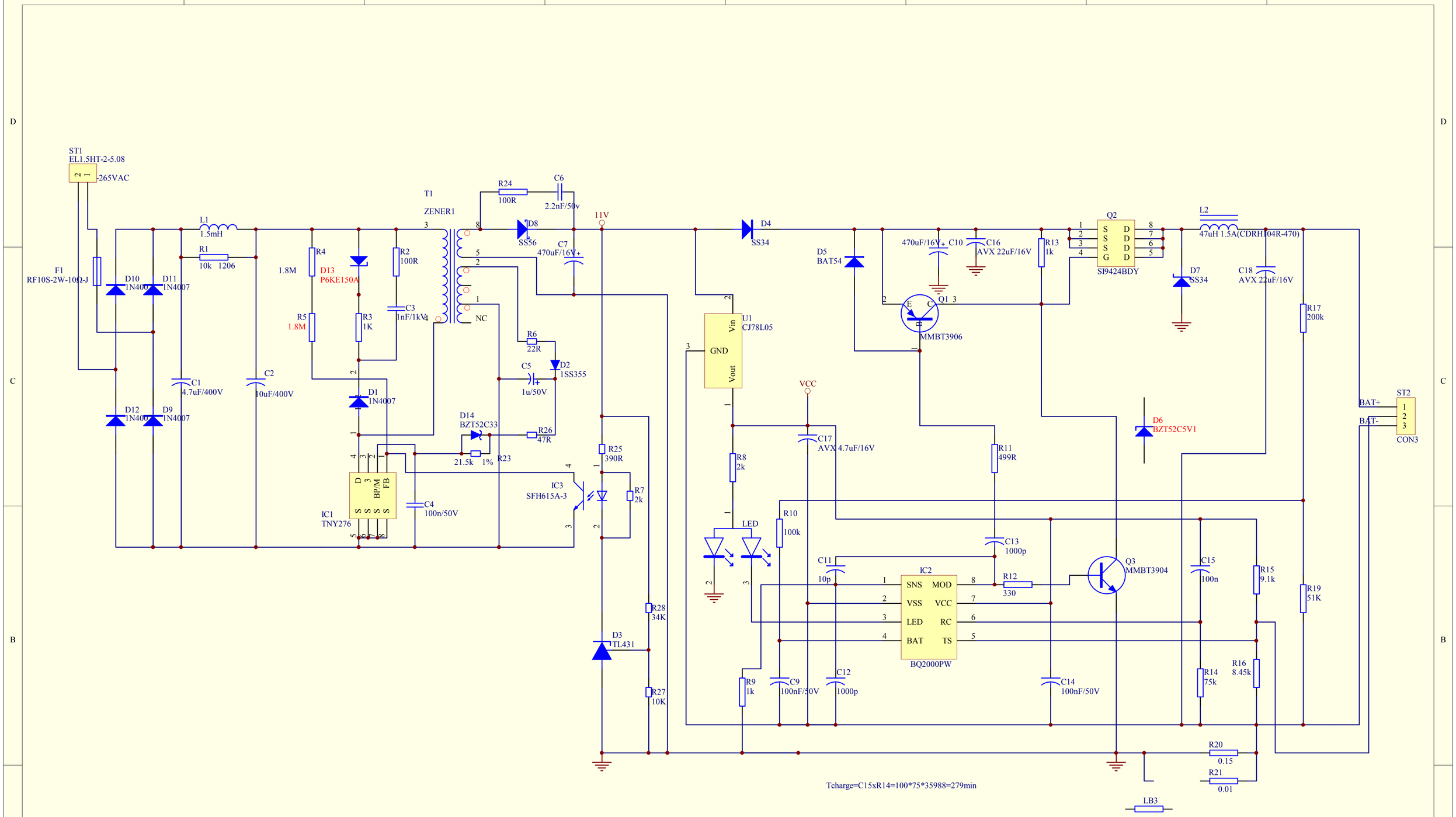

Tcharge=C15xR14=100*75*35988=279min

Title	
Size A3	Number
Date:	8-Feb-2014
File:	E:\文件\挂盒充电器图纸\AC5节镍