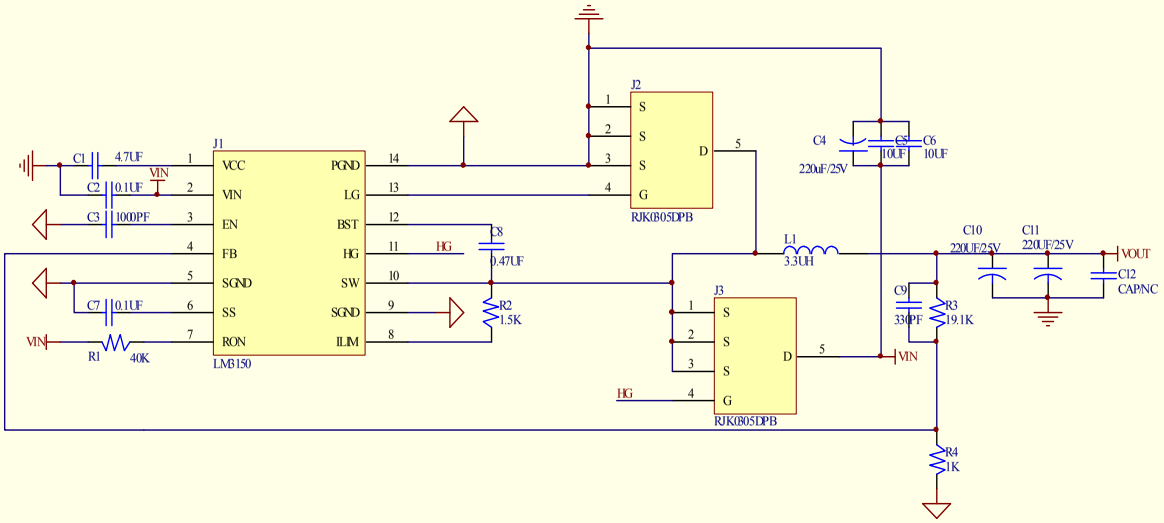

Title		
Size B	Number	Revision
Date: 22-Apr-2014		Sheet of
File: F:\BMS\BMS.Dsb		Drawn By: