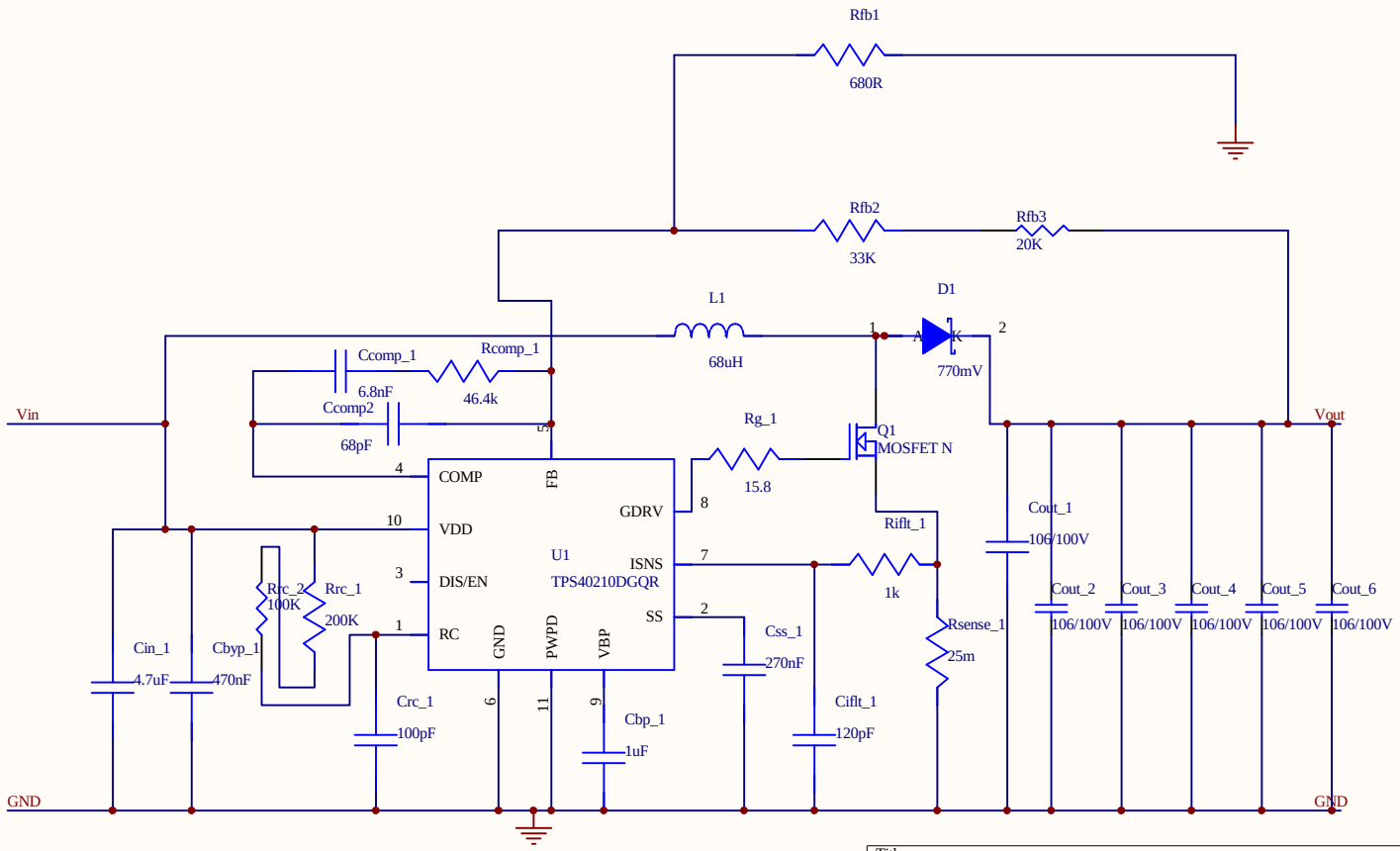

Title		
Size A	Number	Revision
Date: 13-Aug-2014	Sheet of	
File: E:\桌面\升压资料\Altium\2014-07-18_01-13-BUCK升压.DDB	Drawn By:	