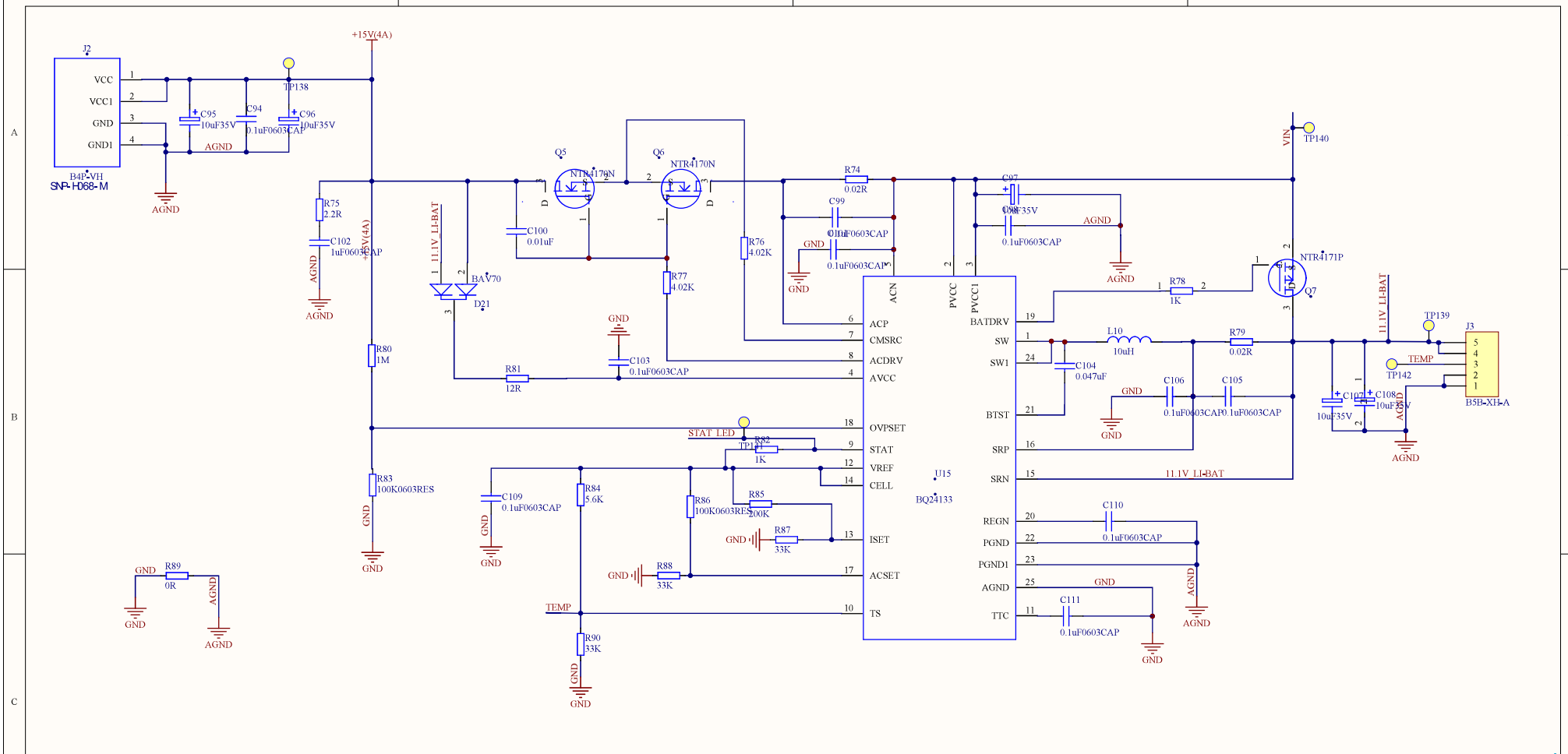

AC

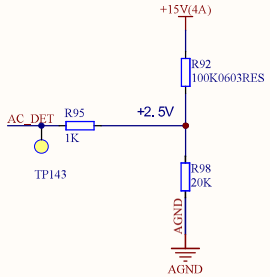

POWER ON/OFF

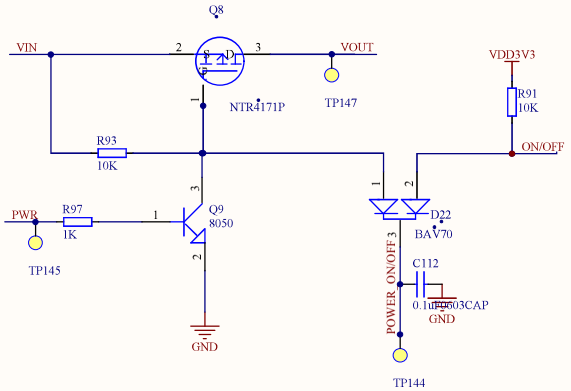

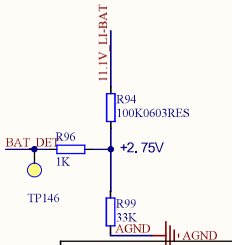

APPROVES & DATE		SIL BIO MEDITECH LTD.	
DESIGN		TITLE: ECG6_Main_Board	
CHECK			
CHECK		CODE: 050-00001-00	
CHECK		MATERIAL:	REV: V02
APPROVAL		F.CODE:	SCALE: /
Software & REV: AD9		KF-050-00001-00	SHEET: 5/7