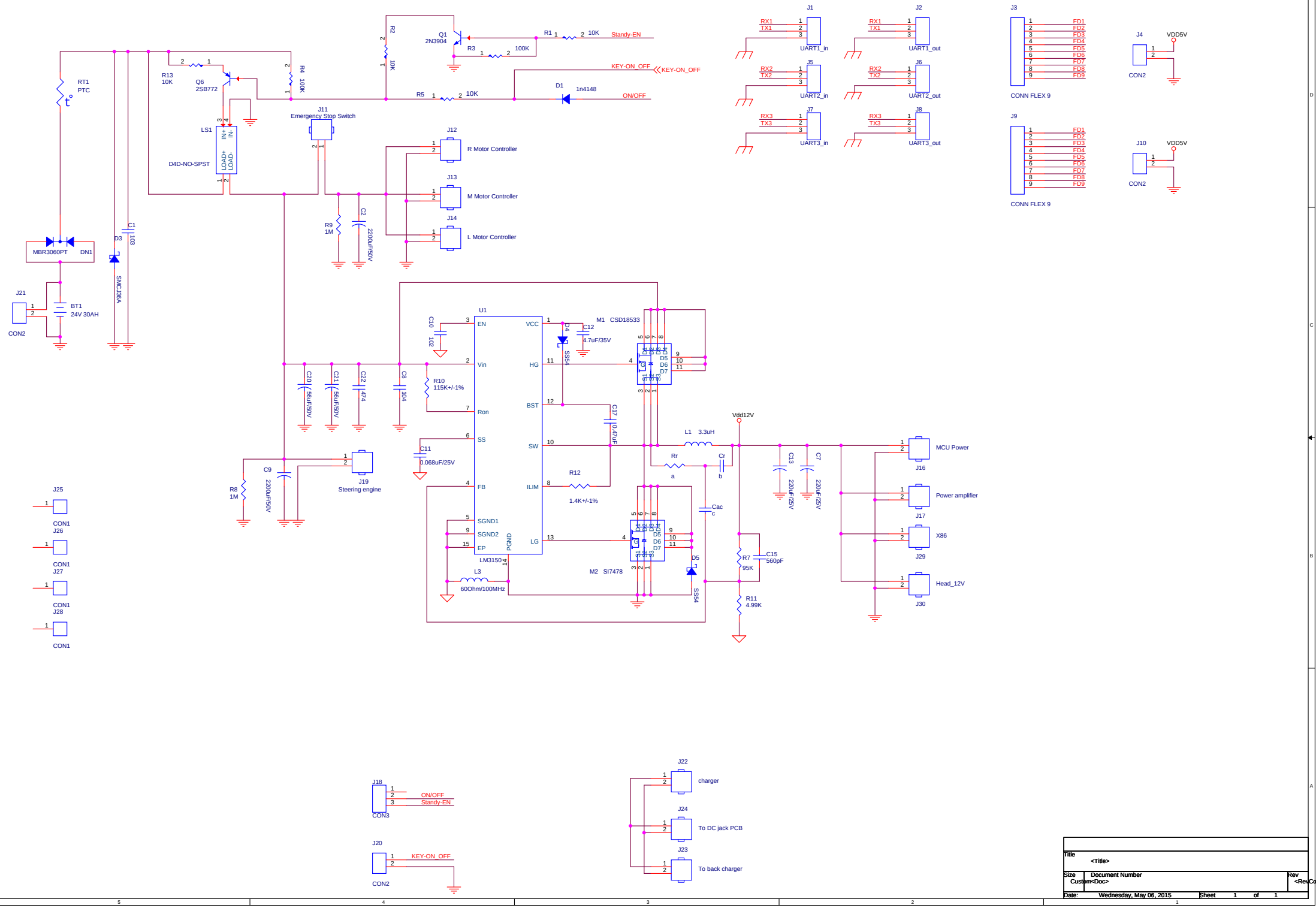

Title	<Title>		
Size Custom	Document Number <Doc>		Rev <RevCode>
Date: Wednesday, May 06, 2015	Sheet 1 of 1		