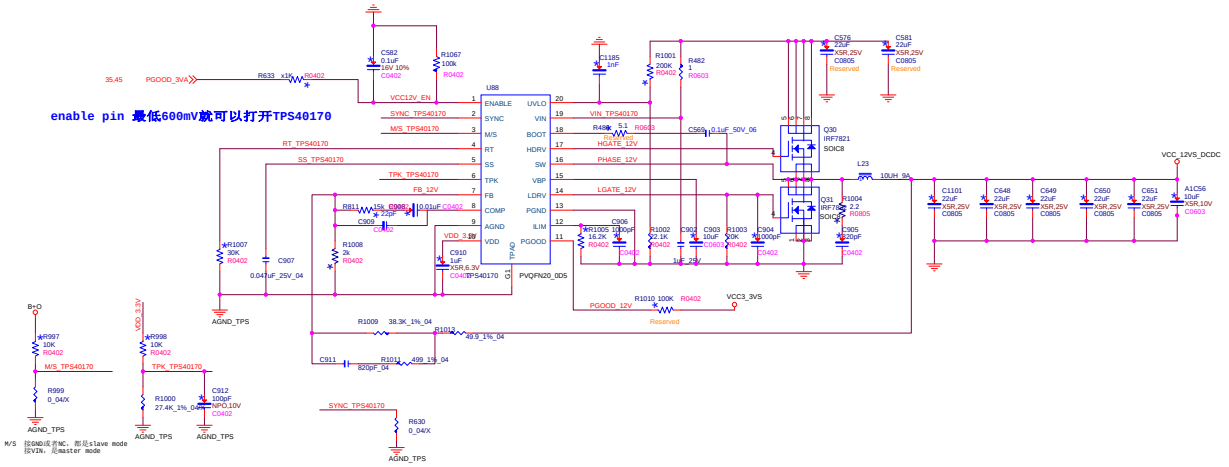

Title	Sandyivy Bridge		
Size C	Document Number		Rev T2.0
Date: Thursday, September 17, 2015	Sheet 47 of 52		