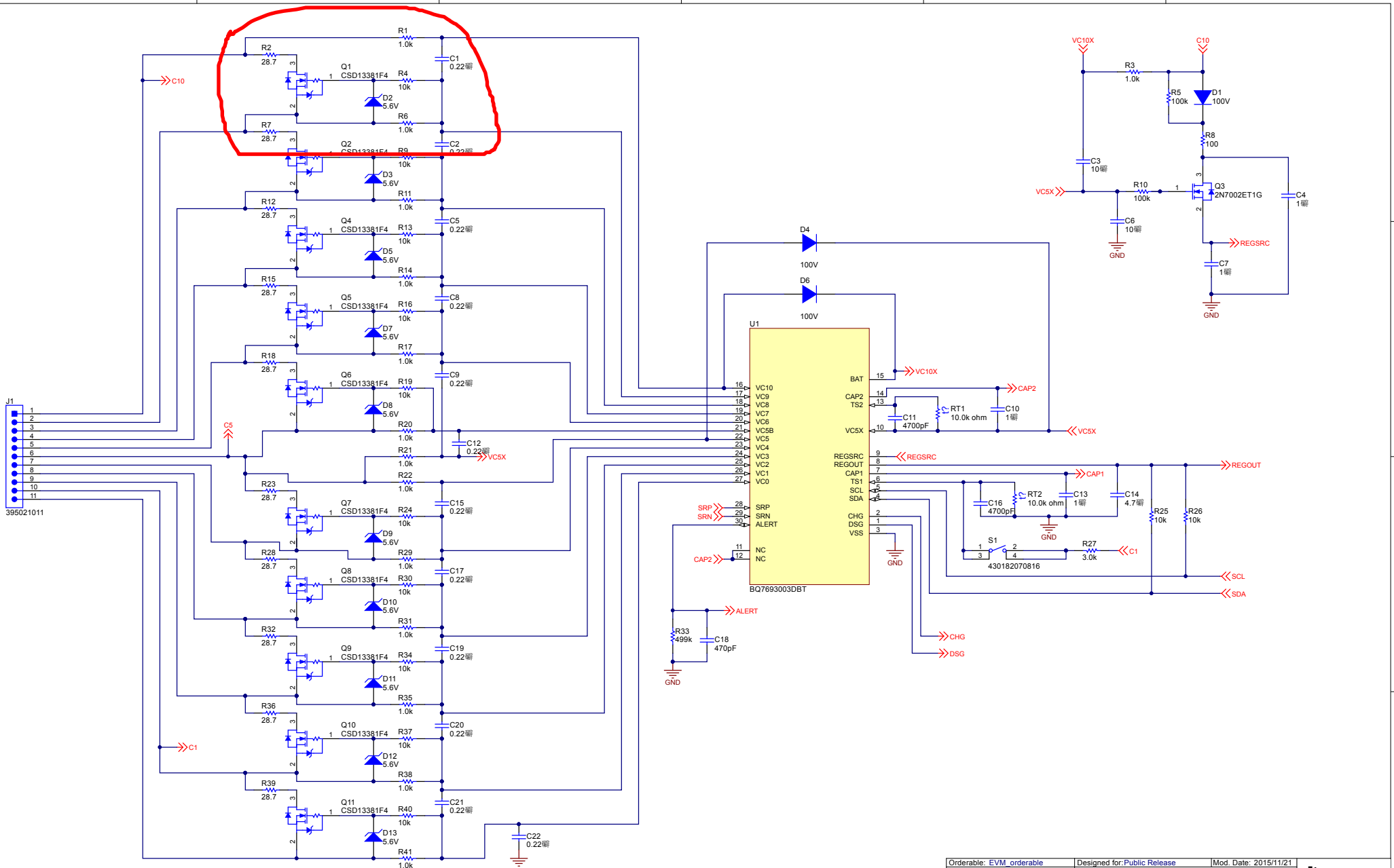

Orderable: EVM_orderable	Designed for: Public Release	Mod. Date: 2015/11/21	
TID #: 00449	Project Title: 10s Battery Pack for Power Tools		
Number: TIDA-00449 Rev: 3.3	Sheet Title:		
SVN Rev: Not in version control	Assembly Variant: Variant name not interpreted	Sheet: 3 of 5	
Drawn By:	File: TIDA-00449_AFE.SchDoc	Size: B	
Engineer: Stauder	Contact: http://www.ti.com/support		

Texas Instruments

http://www.ti.com

Texas Instruments and/or its licensors do not warrant the accuracy or completeness of this specification or any information contained therein. Texas Instruments and/or its licensors do not warrant that this design will meet the specifications, will be suitable for your application or fit for any particular purpose, or will operate in an implementation. Texas Instruments and/or its licensors do not warrant that the design is production worthy. You should completely validate and test your design implementation to confirm the system functionality for your application.

?Texas Instruments 2015