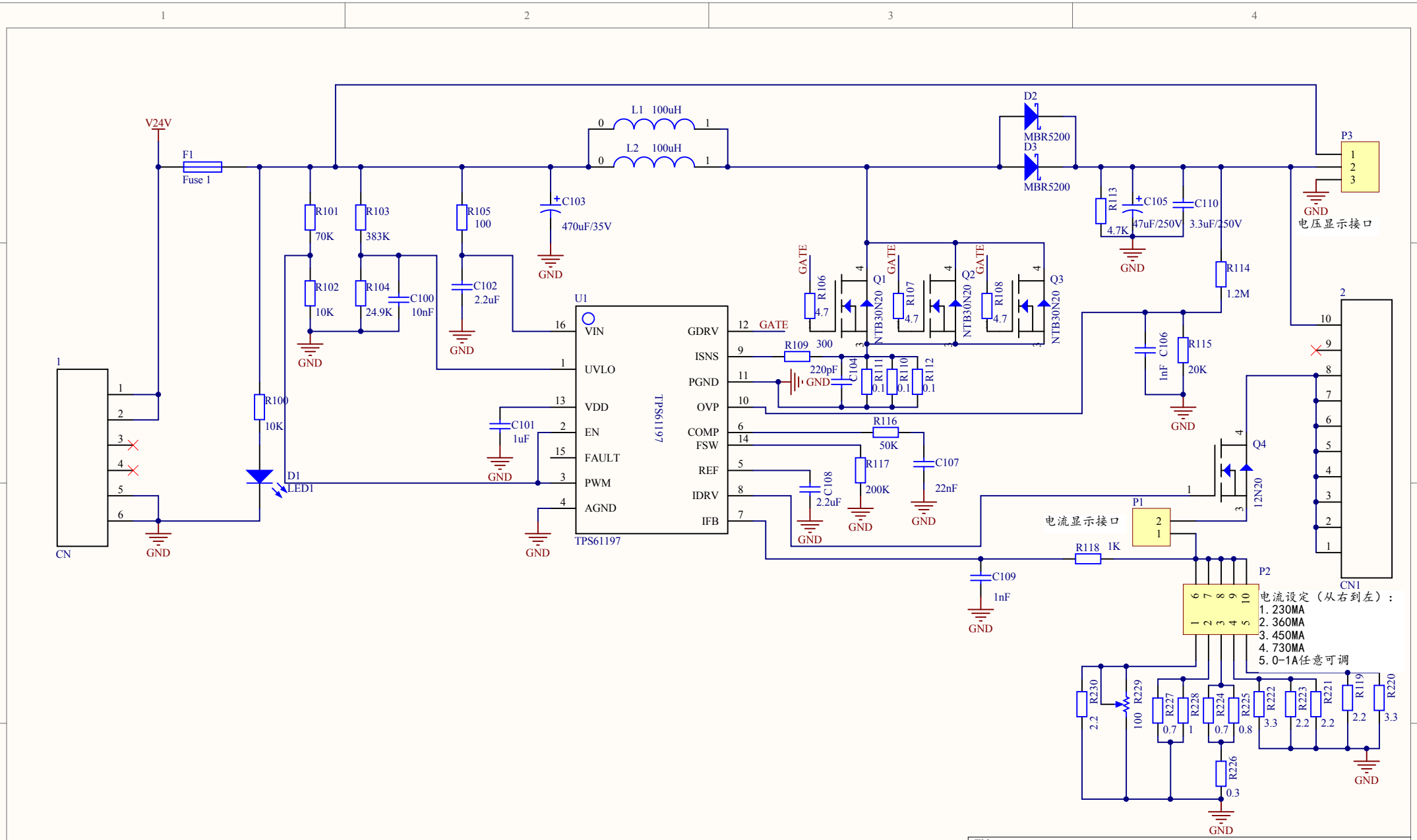

Title		
Size A4	Number	Revision
Date: 2015/12/3		Sheet of
File: C:\Users\..\ .SchDoc		Drawn By: