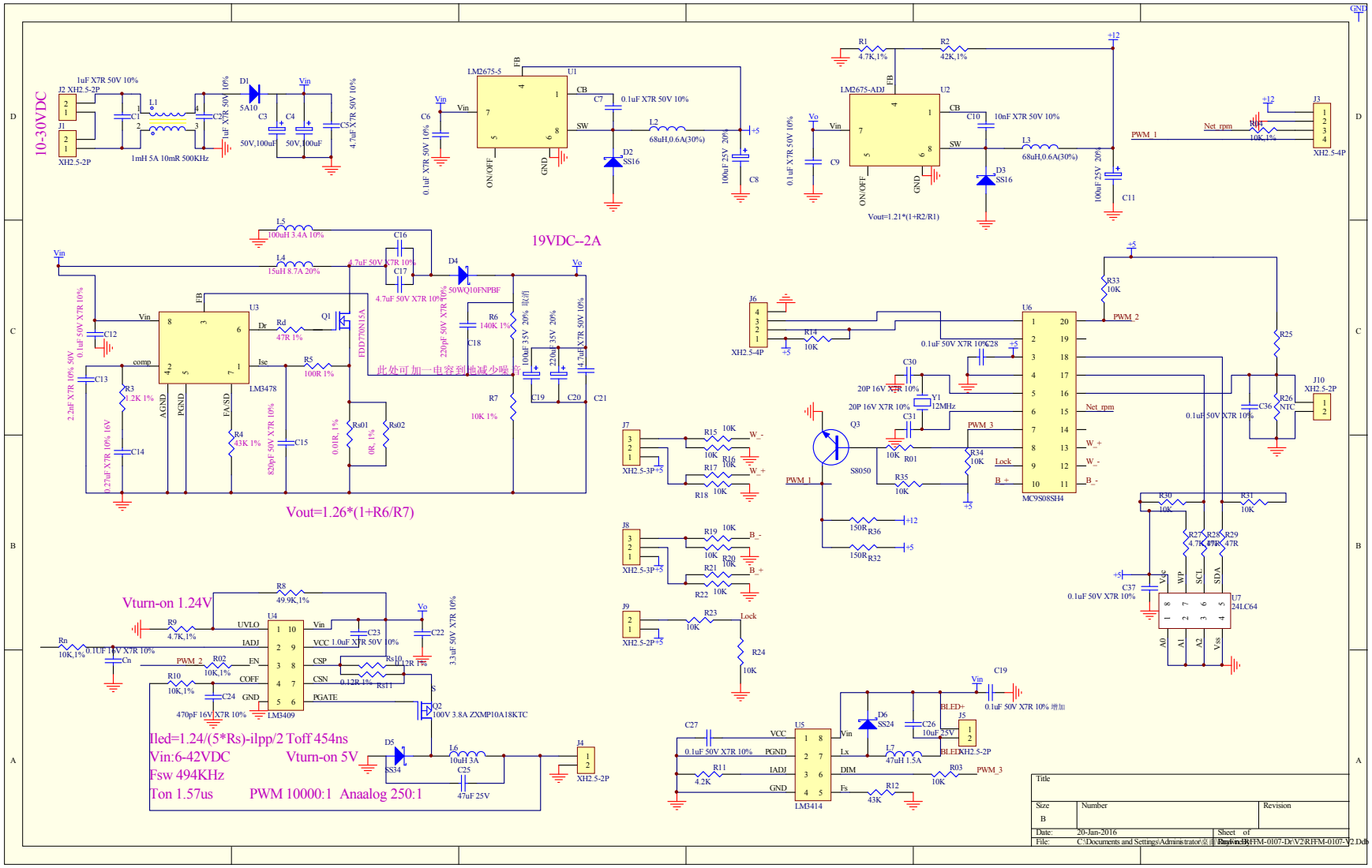
10-30VDC
J2 XH2.5-2P
J1 XH2.5-2P
1uF X7R 50V 10%
L1
1mH 5A 10mR 500KHz
C2 1uF X7R 50V 10%
D1 5A10
C3 50V,100uF
C4 50V,100uF
C5 4.7uF X7R 50V 10%
LM2675-5
U1
FB
CB
SW
ON/OFF
GND
C6 0.1uF X7R 50V 10%
C7 0.1uF X7R 50V 10%
L2 68uH,0.6A(30%)
D2 SS16
C8 100uF 35V 20%
19VDC--2A
R1 4.7K,1%
R2 42K,1%
+12
LM2675-ADJ
U2
C9 0.1uF X7R 50V 10%
C10 10nF X7R 50V 10%
L3 68uH,0.6A(30%)
D3 SS16
C11 100uF 25V 20%
Vout=1.21*(1+R2/R1)
PWM_1
Net_rpm
R04 10K,1%
J3 XH2.5-4P
L5 100uH 3.4A 10%
L4 15uH 8.7A 20%
C16 4.7uF 50V X7R 10%
C17 4.7uF 50V X7R 10%
D4 50WQ10FNPBF
U3
LM3478
Dr
Rd 47R 1%
Q1 FDD770N15A
Ise
R5 100R 1%
comp
AGND
PGND
FA/SD
C12 0.1uF 50V X7R 10%
C13 2.2nF X7R 10% 50V
R3 1.2K 1%
C14 0.27uF X7R 10% 16V
R4 43K 1%
C15 820pF 50V X7R 10%
Rs01 0.01R 1%
Rs02 0R 1%
R6 140K 1%
C18 220pF 50V X7R 10%
R7 10K 1%
C19 100uF 35V 20%
C20 220uF 35V 20%
C21 4.7uF X7R 50V 10%
此处可加一电容到地减少噪声
Vout=1.26*(1+R6/R7)
J6 XH2.5-4P
R14 10K
U6 MC9S08SH4
PWM_2
PWM_3
Net_rpm
Lock
W_+
W_-
B_+
B_-
C28 0.1uF 50V X7R 10%
C30 20P 16V X7R 10%
Y1 12MHz
C31 20P 16V X7R 10%
Q3 S8050
R01 10K
R34 10K
R35 10K
R36 150R
R32 150R
R33 10K
R25
R26 NTC
J10 XH2.5-2P
C36 0.1uF 50V X7R 10%
J7 XH2.5-3P
R15 10K
R16 10K
R17 10K
R18 10K
J8 XH2.5-3P
R19 10K
R20 10K
R21 10K
R22 10K
J9 XH2.5-2P
R23 10K
R24 10K
R30 10K
R31 10K
R27 4.7K
R28 47R
R29 47R
C37 0.1uF 50V X7R 10%
U7 24LC64
WP
SCL
SDA
Vcc
Vss
A0
A1
A2
Vturn-on 1.24V
R8 49.9K,1%
R9 4.7K,1%
Rn 10K,1%
Cn 0.1UF 16V X7R 10%
R02 10K,1%
R10 10K,1%
C24 470pF 16V X7R 10%
U4 LM3409
UVLO
IADJ
EN
COFF
GND
Vin
VCC
CSP
CSN
PGATE
C23 1.0uF X7R 50V 10%
C22 3.3uF 50V X7R 10%
Rs10 0.12R 1%
Rs11 0.12R 1%
Q2 ZXMP10A18KTC
Iled=1.24/(5*Rs)-ilpp/2 Toff 454ns
Vin:6-42VDC
Fsw 494KHz
Ton 1.57us
Vturn-on 5V
PWM 10000:1 Anaalog 250:1
D5 SS34
L6 10uH 3A
C25 47uF 25V
J4 XH2.5-2P
C27 0.1uF 50V X7R 10%
R11 4.2K
U5 LM3414
VCC
PGND
IADJ
GND
Vin
Lx
DIM
Fs
D6 SS24
C26 10uF 25V
L7 47uH 1.5A
R12 45K
R03 10K
C19 0.1uF 50V X7R 10% 增加
J5 XH2.5-2P
BLED+
BLED-
Title
Size B
Number
Revision
Date: 20-Jan-2016
Sheet of
File: C:\Documents and Settings\Administrator\桌面\RFM-0107-Dr\V2\RFM-0107-V2.Ddb