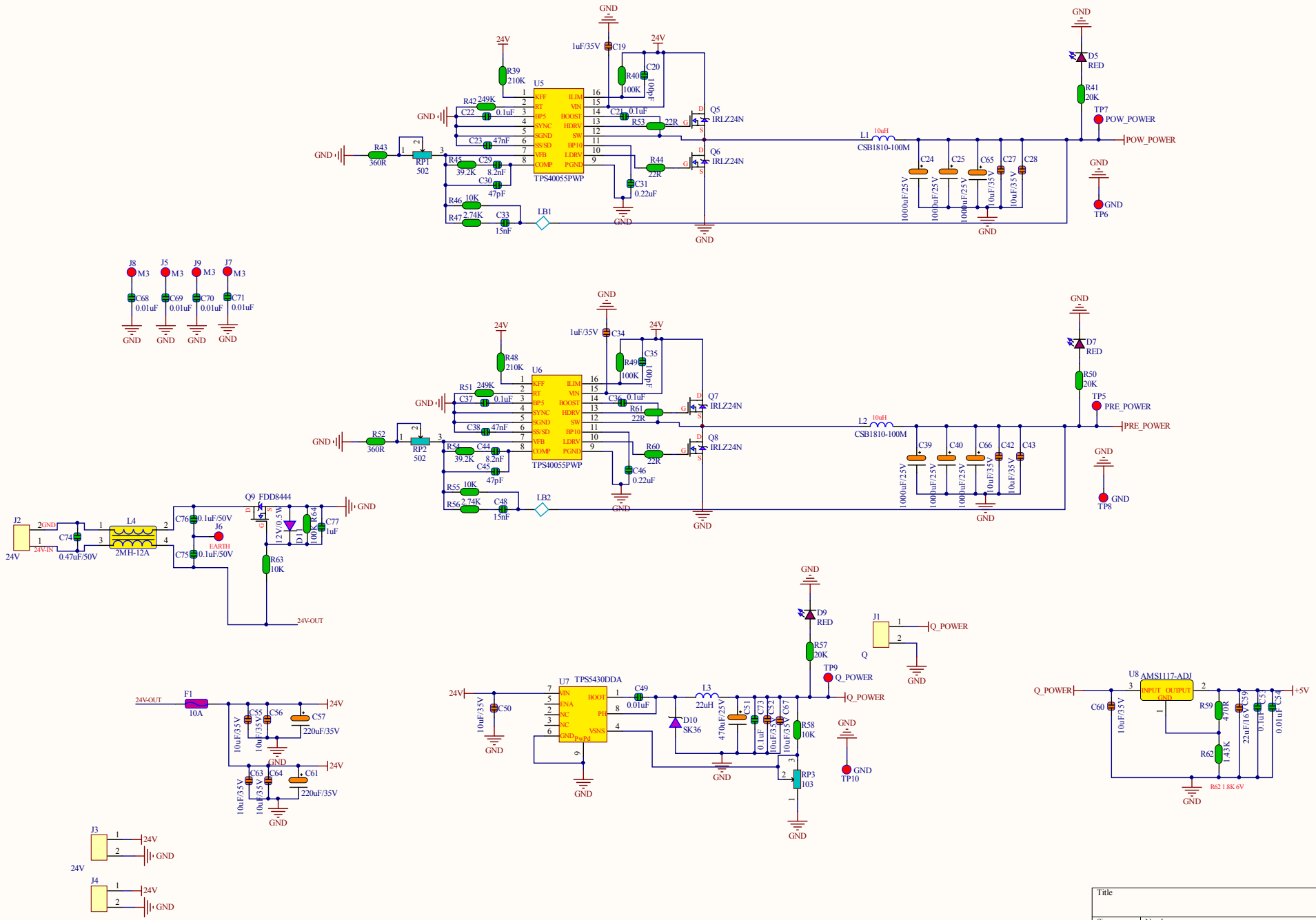

Title		
Size A3	Number	Revision
Date: 2016-7-12		Sheet of
File: D:\PCB \ +PUMP V1.2\	SchDoc	Drawn By: