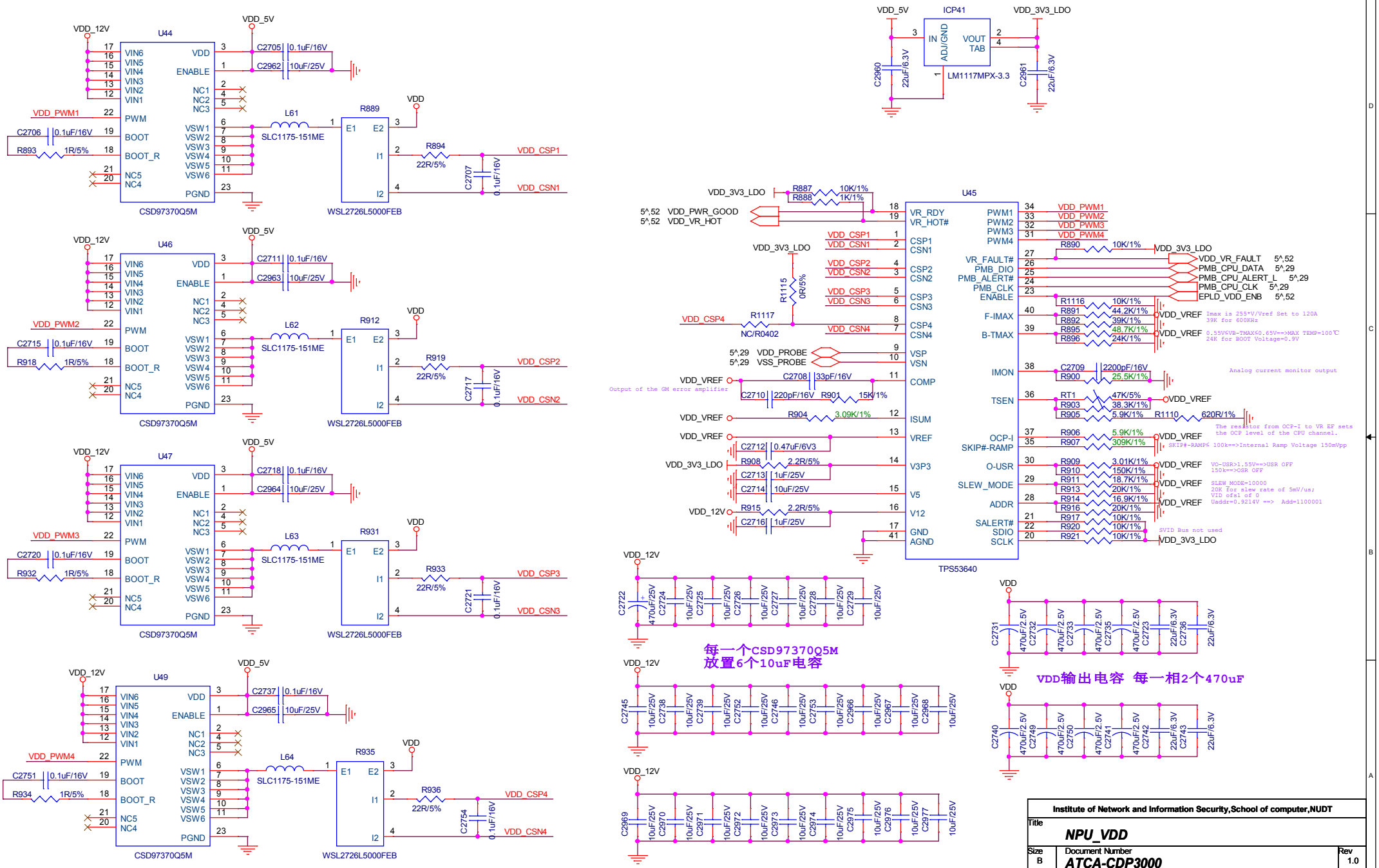
U44
U46
U47
U49
CSD97370Q5M
WSL2726L5000FEB
L61
L62
L63
L64
SLC1175-151ME
R889
R912
R931
R935
R894
R919
R933
R936
VDD_12V
VDD_5V
VDD
VDD_PWM1
VDD_PWM2
VDD_PWM3
VDD_PWM4
VDD_CSP1
VDD_CSN1
VDD_CSP2
VDD_CSN2
VDD_CSP3
VDD_CSN3
VDD_CSP4
VDD_CSN4
ICP41
LM1117MPX-3.3
VDD_3V3_LDO
TPS53640
VDD_PWR_GOOD
VDD_VR_HOT
VDD_VR_FAULT
VDD_CPU_DATA
VDD_CPU_ALERT_L
VDD_CPU_CLK
EPLD_VDD_ENB
每一个CSD97370Q5M
放置6个10uF电容
VDD输出电容 每一相2个470uF
Institute of Network and Information Security,School of computer,NUDT
Title
NPU_VDD
Size
B
Document Number
ATCA-CDP3000
Rev
1.0
Date: Tuesday, August 30, 2016
Sheet 8 of 70

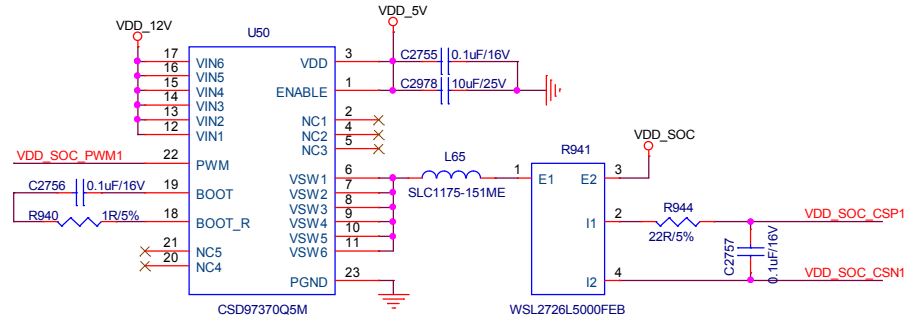

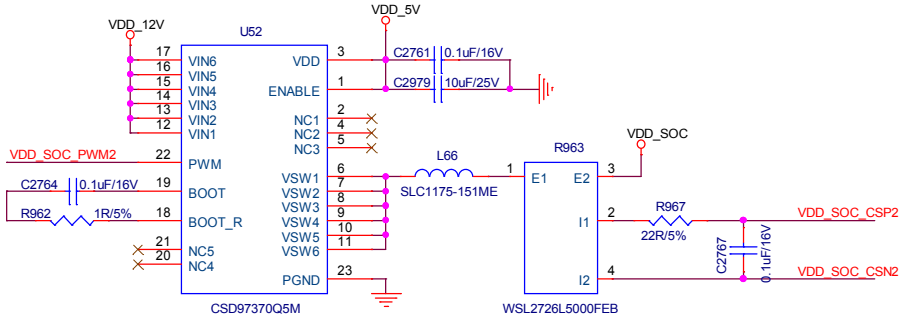

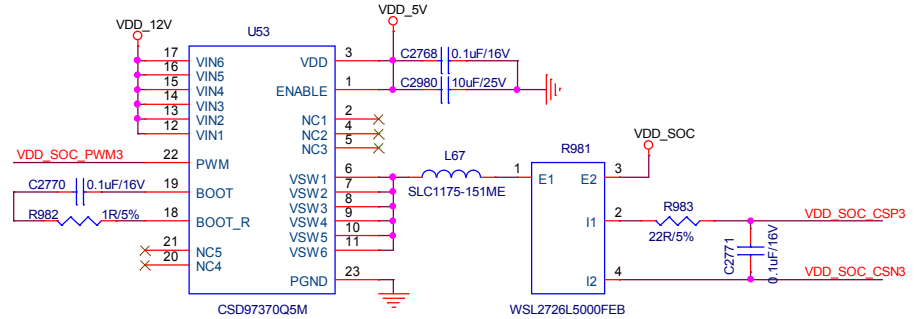

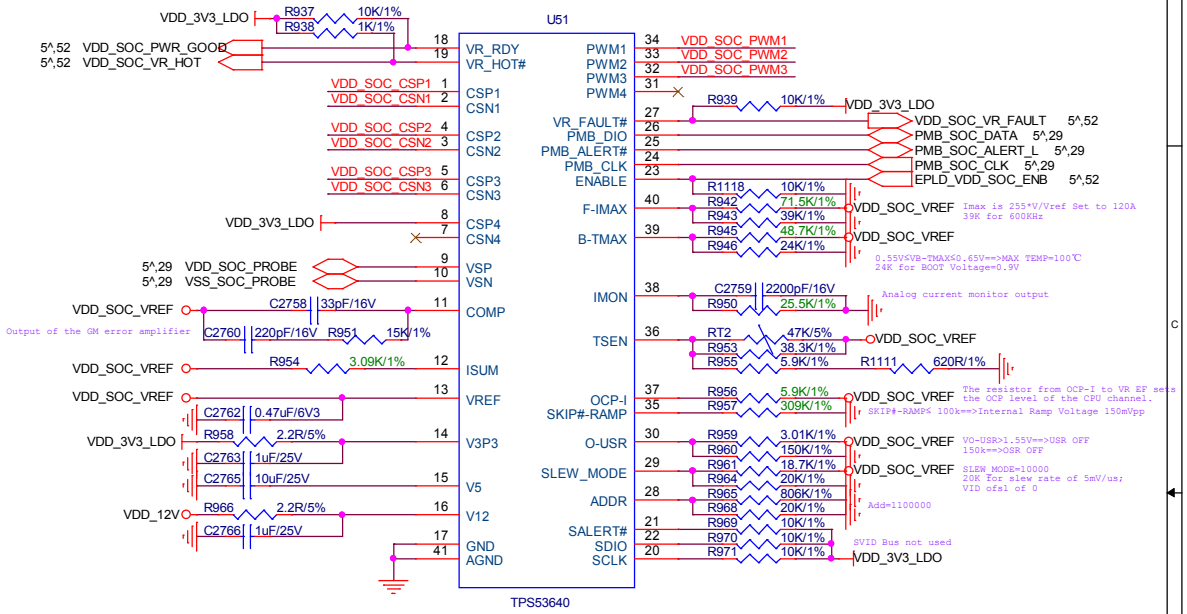

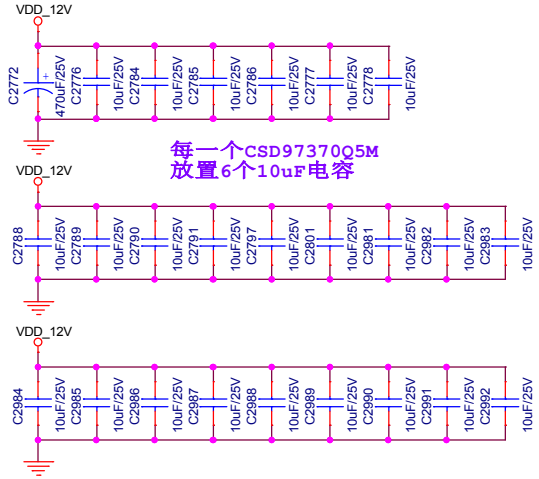

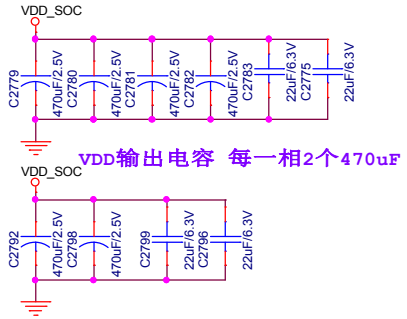

Institute of Network and Information Security,School of computer,NUDT		
Title	NPU_VDD_SOC	
Size B	Document Number ATCA-CDP3000	Rev 1.0
Date: Tuesday, March 22, 2016	Sheet 9 of 70	