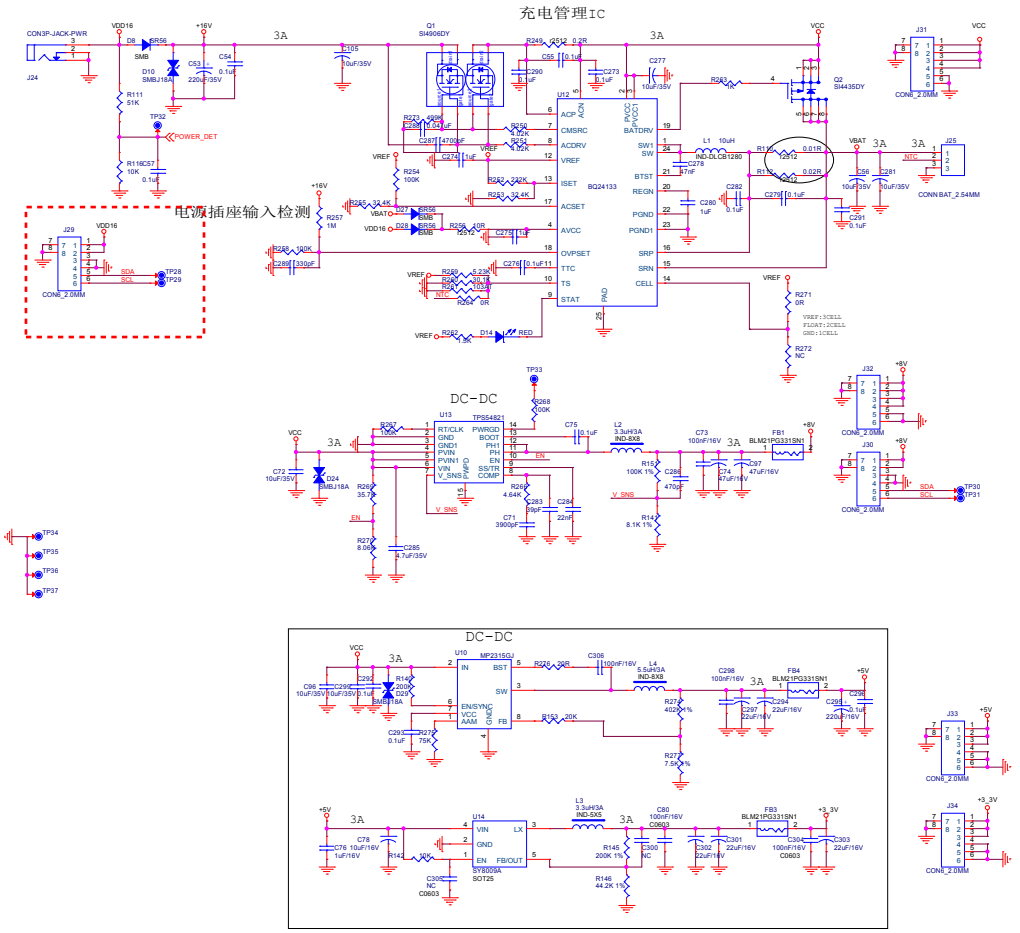
充电管理IC
电源插座输入检测
DC-DC
CON3P-JACK-PWR
J24
VDD16
+16V
3A
Q1
SI4906DY
VCC
Q2
SI4435DY
J31
CON2_2.0MM
U12
BQ24133
ACP
CMSRC
ACDRV
VREF
ISET
ACSET
AVCC
OVPSET
TTC
TS
STAT
BATDRV
SW1
BTST
REGN
PGND
PGND1
SRP
SRN
CELL
L1 10uH
IND-DLC8T280
VBAT
J25
CONN BAT_2.54MM
J29
CON2_2.0MM
SDA
SCL
TP28
TP29
TP32
POWER_DET
TP33
U13
TPS54821
RT/CLK
GND
GND1
PVIN
PVIN1
VIN
V_SNS
PWRGD
BOOT
PH1
PH
EN
SS/TR
COMP
L2
3.3uH/3A
IND-8X8
FB1
BLM21PG331SN1
J32
J30
TP30
TP31
TP34
TP35
TP36
TP37
U10
MP2315GJ
IN
BST
SW
EN/SYNC
VCC
AAM
FB
L4
5.5uH/3A
IND-8X8
FB4
BLM21PG331SN1
J33
J34
U14
VIN
LX
GND
EN
FB/OUT
SY8009A
SOT25
L3
3.3uH/3A
IND-8X5
FB3
BLM21PG331SN1
+3_3V
Title
<Title>
Size
C
Document Number
<Doc>
Rev
<RevCode>
Date:
Tuesday, August 23, 2016
Sheet
2
of
5