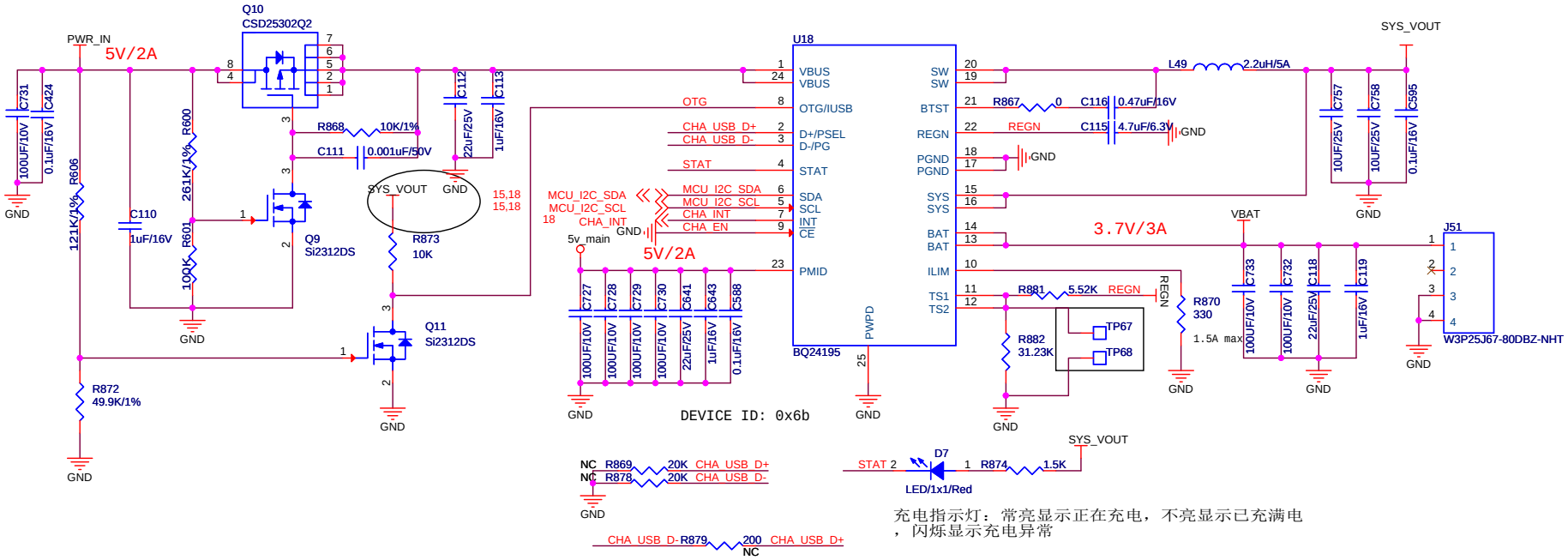

Title	<Title>		
Size B	Document Number <Doc>		Rev <RevCode>
Date: Sunday, October 09, 2016	Sheet 17 of 18		