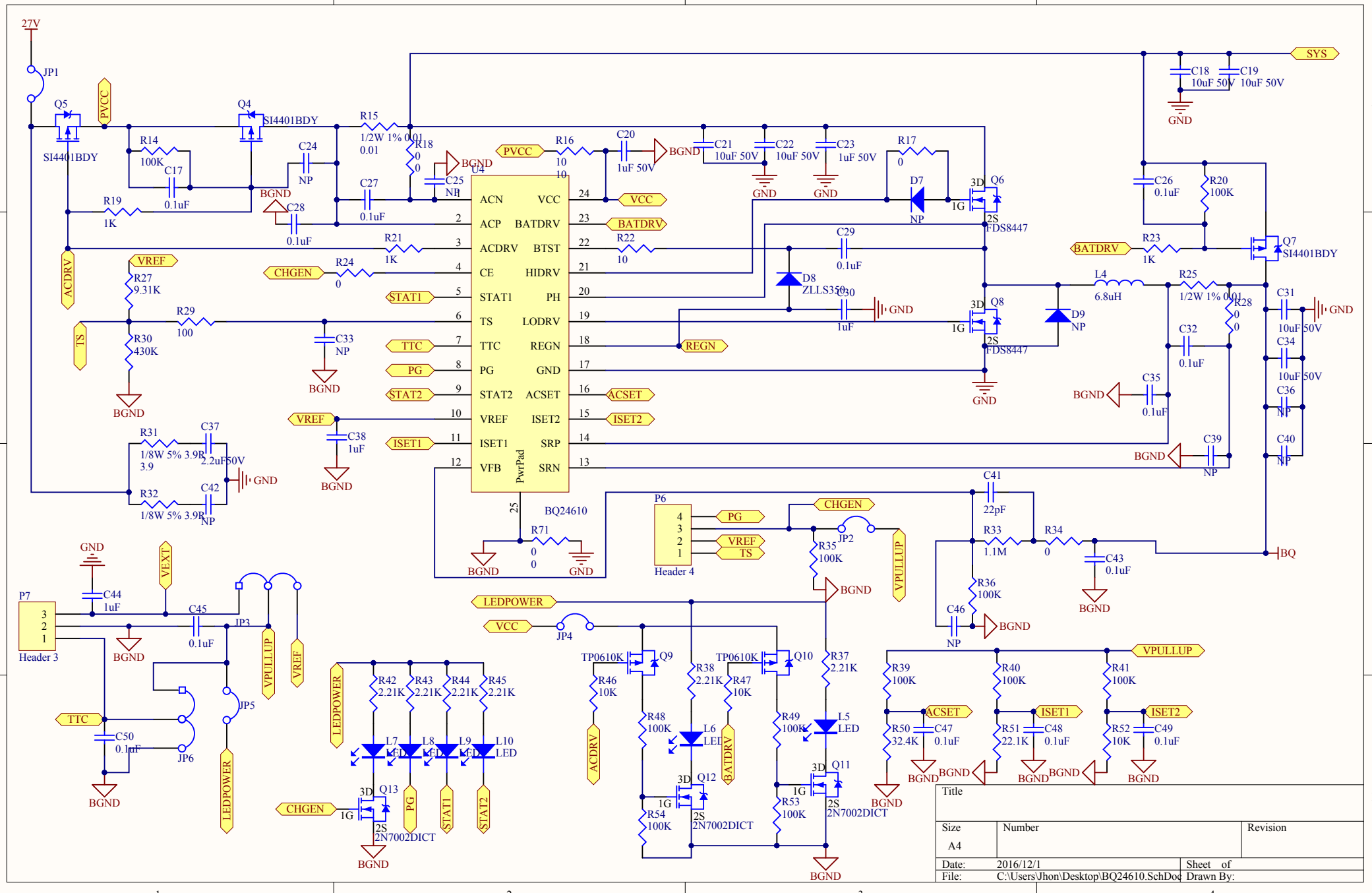
27V
JP1
Q5
SI4401BDY
PVCC
Q4
SI4401BDY
R14
100K
C17
0.1uF
R19
1K
C24
NP
C28
0.1uF
R15
1/2W 1% 0.01
0.01
R18
0
0
C27
0.1uF
C25
NP
BGND
U4
BQ24610
ACN
ACP
ACDRV
CE
STAT1
TS
TTC
PG
STAT2
VREF
ISET1
VFB
VCC
BATDRV
BTST
HIDRV
PH
LODRV
REGN
GND
ACSET
ISET2
SRP
SRN
PwrPad
R16
10
10
C20
1uF 50V
C21
10uF 50V
C22
10uF 50V
C23
1uF 50V
R17
0
D7
NP
Q6
FDS8447
C29
0.1uF
D8
ZLLS350
C30
1uF
Q8
FDS8447
D9
NP
L4
6.8uH
R25
1/2W 1% 0.01
R28
0
0
C32
0.1uF
C35
0.1uF
C39
NP
C18
10uF 50V
C19
10uF 50V
SYS
C26
0.1uF
R20
100K
R23
1K
Q7
SI4401BDY
C31
10uF 50V
C34
10uF 50V
C36
NP
C40
NP
R21
1K
R22
10
R24
0
R27
9.31K
R29
100
R30
430K
C33
NP
C38
1uF
R31
1/8W 5% 3.9R
3.9
C37
2.2uF 50V
R32
1/8W 5% 3.9R
C42
NP
R71
0
0
P6
Header 4
PG
VREF
TS
CHGEN
JP2
R35
100K
VPULLUP
C41
22pF
R33
1.1M
R34
0
C43
0.1uF
BQ
R36
100K
C46
NP
P7
Header 3
C44
1uF
C45
0.1uF
JP3
VEXT
VPULLUP
VREF
LEDPOWER
VCC
JP4
TTC
C50
0.1uF
JP6
JP5
R42
2.21K
R43
2.21K
R44
2.21K
R45
2.21K
L7
LED
L8
LED
L9
LED
L10
LED
Q13
2N7002DICT
TP0610K
Q9
R46
10K
R48
100K
R38
2.21K
L6
LED
R47
10K
Q12
2N7002DICT
R54
100K
TP0610K
Q10
R37
2.21K
R49
100K
L5
LED
Q11
2N7002DICT
R53
100K
R39
100K
R40
100K
R41
100K
R50
32.4K
C47
0.1uF
R51
22.1K
C48
0.1uF
R52
10K
C49
0.1uF
ACSET
ISET1
ISET2
Title
Size
A4
Number
Revision
Date: 2016/12/1
Sheet of
File: C:\Users\Jhon\Desktop\BQ24610.SchDoc
Drawn By: