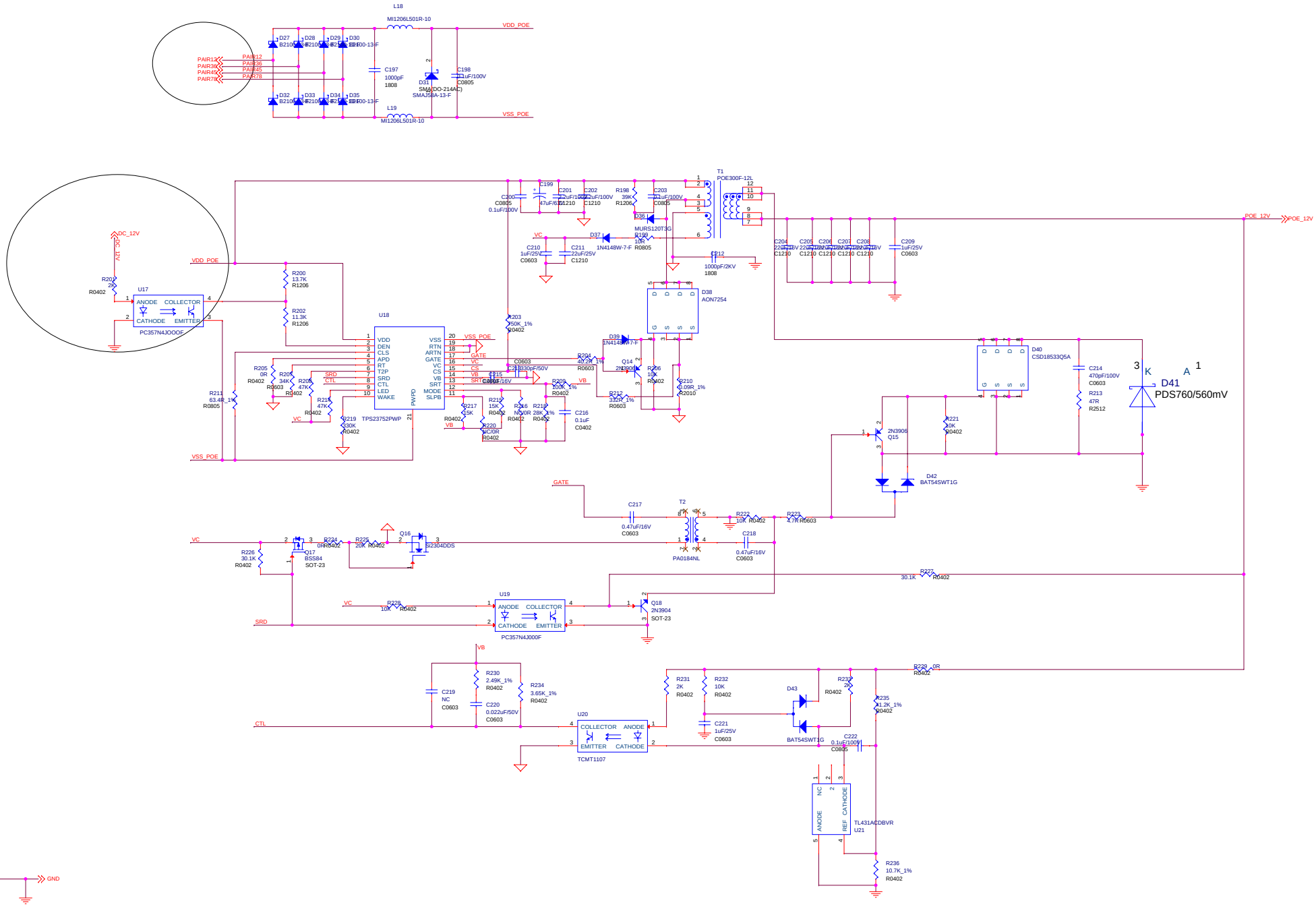

Title	<Title>
Size A2	Document Number <Doc>
Rev	<RevCode>
Date: Wednesday, November 30, 2016	Sheet 8 of 9