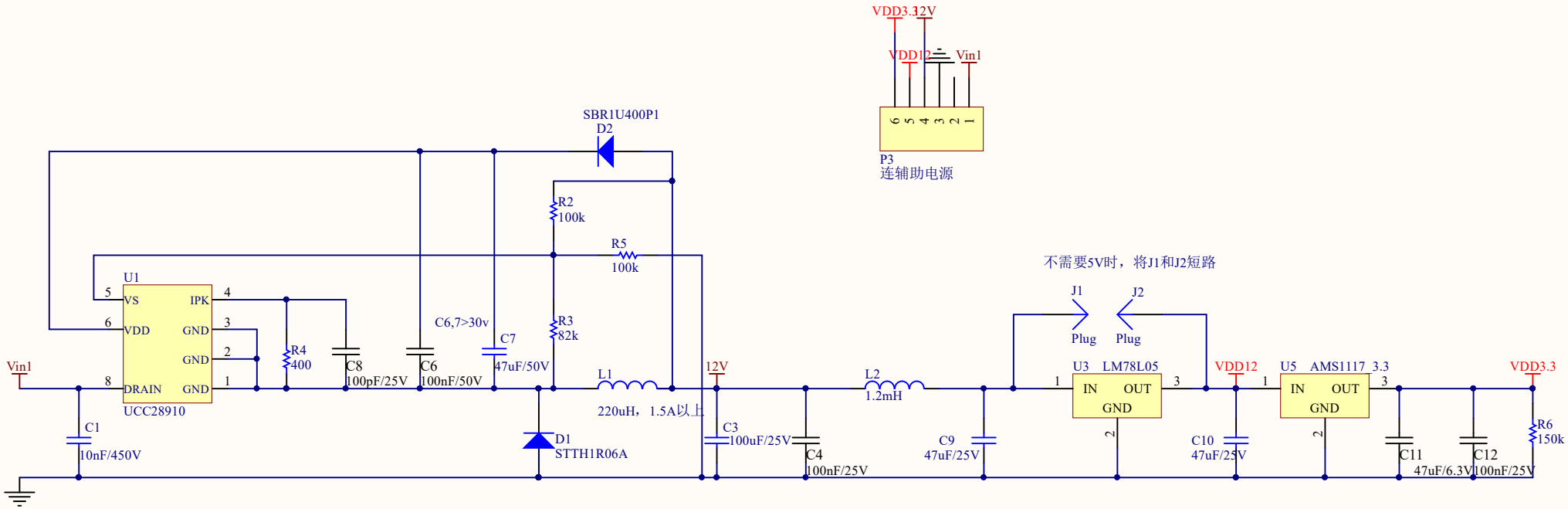

Title		
Size A4	Number	Revision
Date: 2017/8/3		Sheet of
File: F:\从玉婷转移\..\电磁炉辅助电源UCC28910.SchDoc		Drawn By: