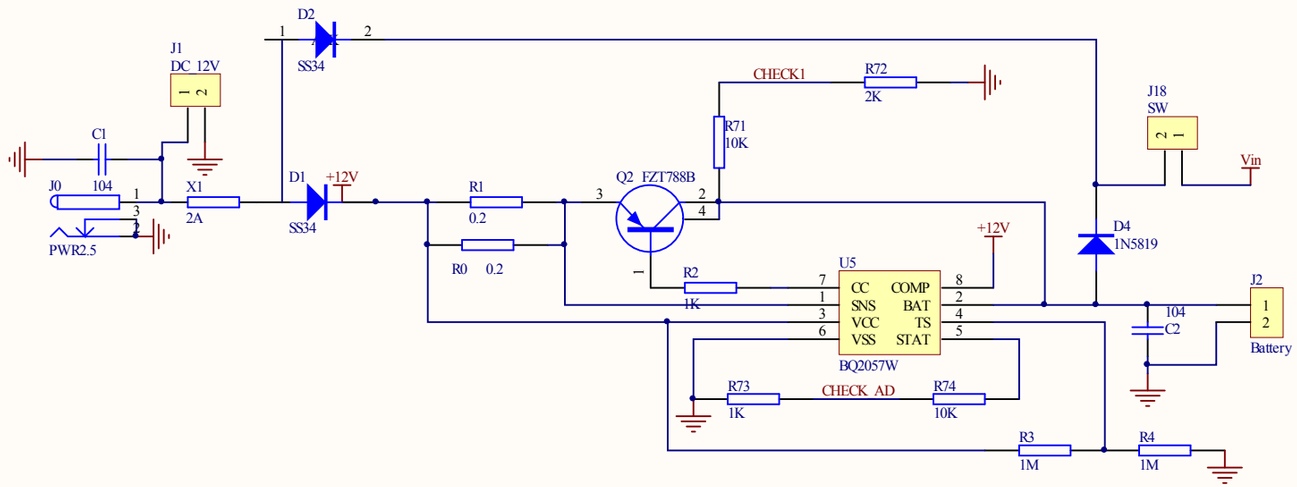

Title		
Size B	Number	Revision
Date: 2011-12-28		Sheet of
File: C:\Documents and Settings\..\BQ2057W.Sch		Drawn By: