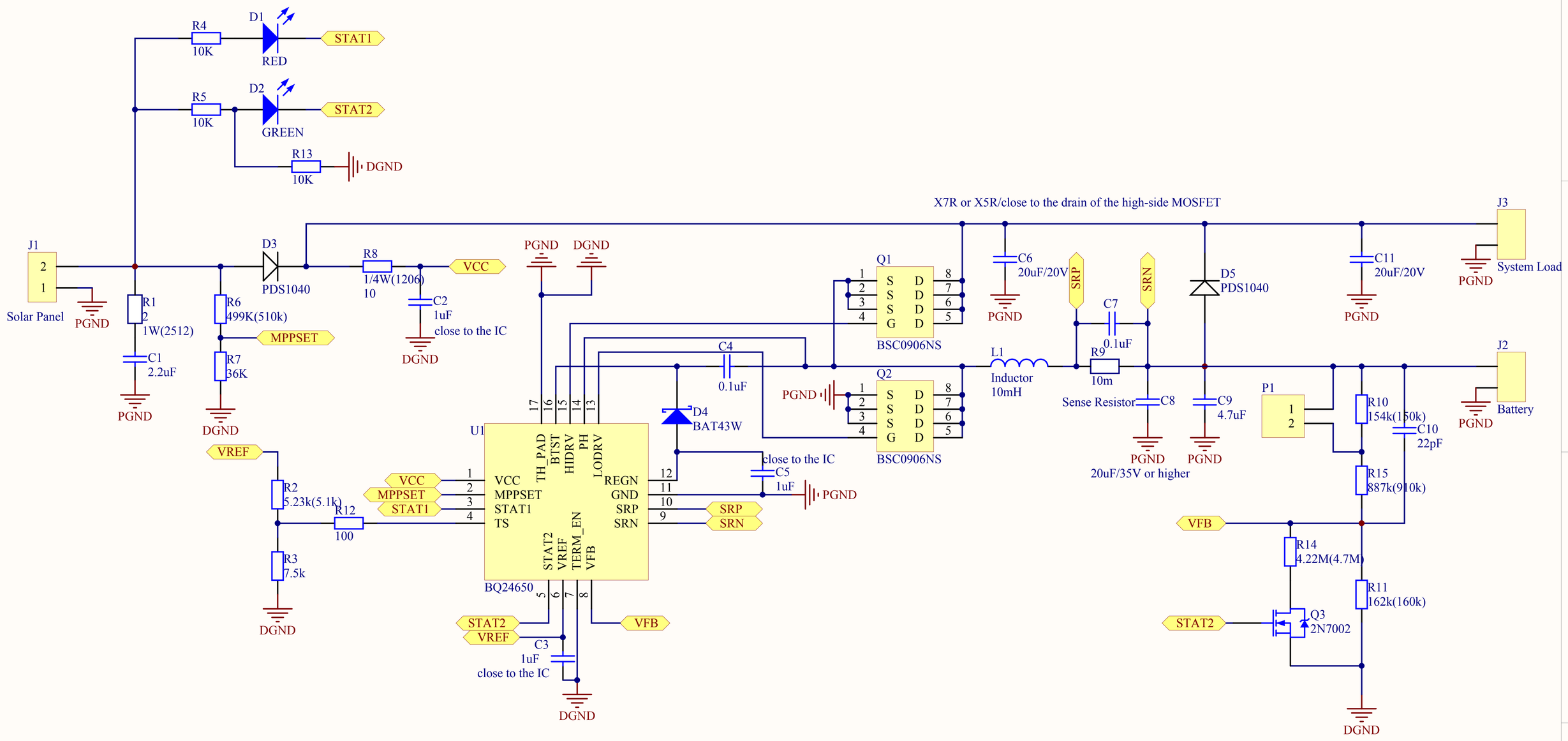

X7R X5R
2012-1-16 by czchc

Title		
Size A4	Number	Revision
Date: 2012/5/30		Sheet of
File: D:\Users\..\BQ24650.SchDoc		Drawn By: