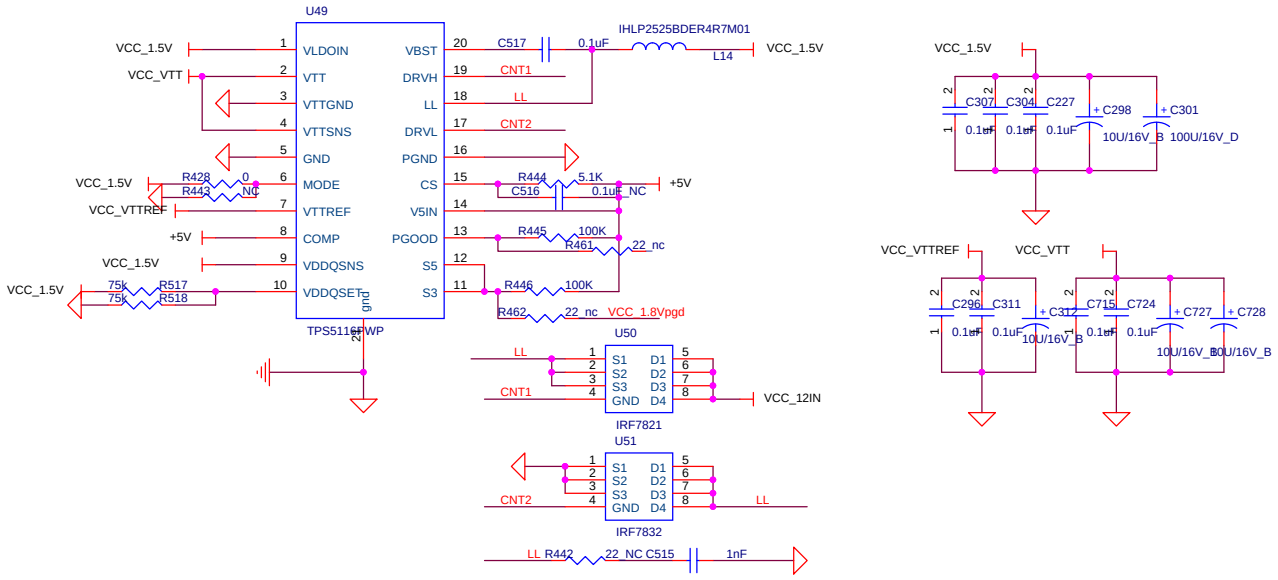

Title <Title>		
Size A3	Document Number <Doc>	Rev <RevCod
Date: Friday, December 28, 2012	Sheet 1 of 1	