WEBENCH® 设计报告

VinMin = 10.0V
VinMax = 15.0V
Vout = 5.0V
Iout = 2.0A

Device = TPS54394PWP
Topology = Buck
创建 = 5/2/13 10:55:59 PM
BOM成本 = $3.83
Total Pd = 0.75W
大小 = 203.0mm2
BOM 数量 = 11

Design : 3334464/1 TPS54394PWP
TPS54394PWP 10.0V-15.0V to 5.0V @ 2.0A

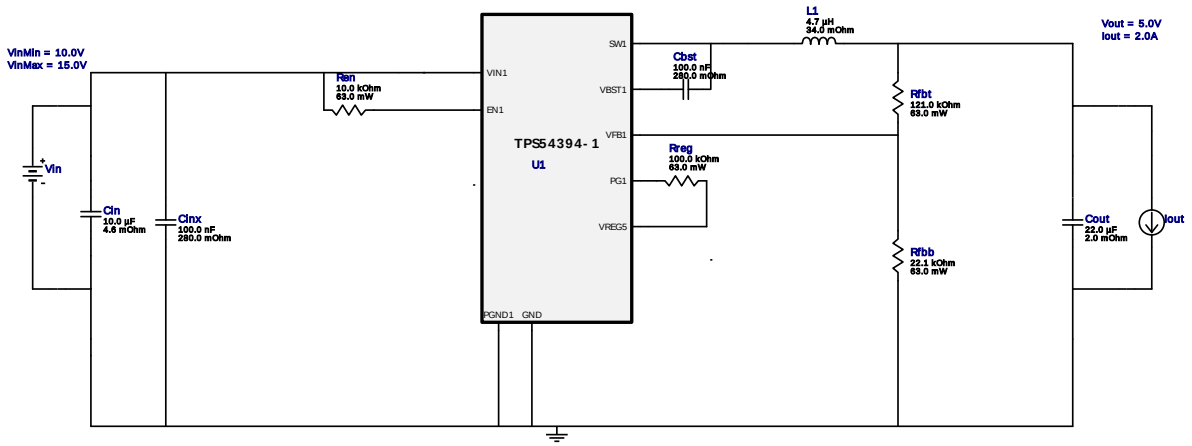

电气材料清单

#	名称	制造商	零件编号	属性	Qty	Price	大小
1.	Cbst	AVX	08053C104KAT2A Series= X7R	Cap= 100.0 nF ESR= 280.0 mOhm VDC= 25.0 V IRMS= 0.0 A	1	$0.01	0805 13mm2
2.	Cin	TDK	C3216X5R1C106M Series= X5R	Cap= 10.0 µF ESR= 4.6 mOhm VDC= 16.0 V IRMS= 2.7 A	2	$0.06	1206 19mm2
3.	Cinx	AVX	08053C104KAT2A Series= X7R	Cap= 100.0 nF ESR= 280.0 mOhm VDC= 25.0 V IRMS= 0.0 A	1	$0.01	0805 13mm2
4.	Cout	TDK	C3216X5R0J226K Series= X5R	Cap= 22.0 µF ESR= 2.0 mOhm VDC= 6.3 V IRMS= 3.62 A	1	$0.11	1206 19mm2
5.	L1	TDK	VLC5045T-4R7M	L= 4.7 µH DCR= 34.0 mOhm	1	$0.18	VLC5045 49mm2
6.	Ren	Vishay-Dale	CRCW040210K0FKED Series= CRCW..e3	Res= 10.0 kOhm Power= 63.0 mW Tolerance= 1.0%	1	$0.01	0402 8mm2
7.	Rfbb	Vishay-Dale	CRCW040222K1FKED Series= CRCW..e3	Res= 22.1 kOhm Power= 63.0 mW Tolerance= 1.0%	1	$0.01	0402 8mm2
8.	Rfbt	Vishay-Dale	CRCW0402121KFKED Series= CRCW..e3	Res= 121.0 kOhm Power= 63.0 mW Tolerance= 1.0%	1	$0.01	0402 8mm2
9.	Rreg	Vishay-Dale	CRCW0402100KFKED Series= CRCW..e3	Res= 100.0 kOhm Power= 63.0 mW Tolerance= 1.0%	1	$0.01	0402 8mm2
10.	U1	Texas Instruments	TPS54394PWP	Switcher	1	$3.36	R-PDSO-G16 42mm2

Copyright © 2013, Texas Instruments Incorporated

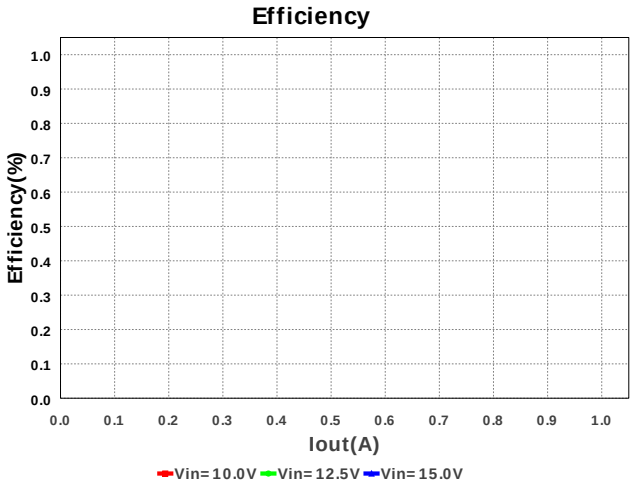

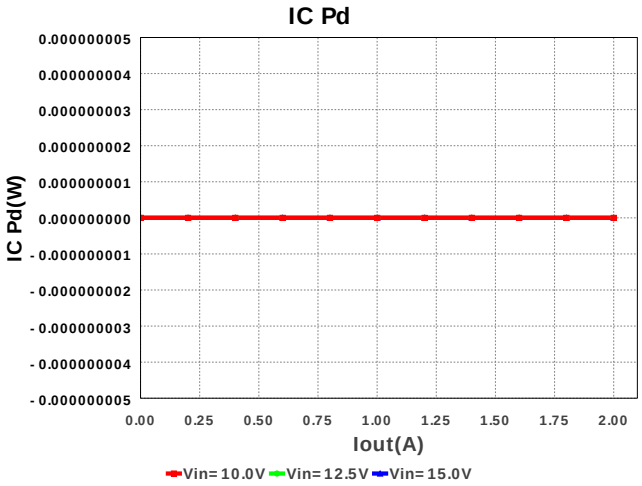

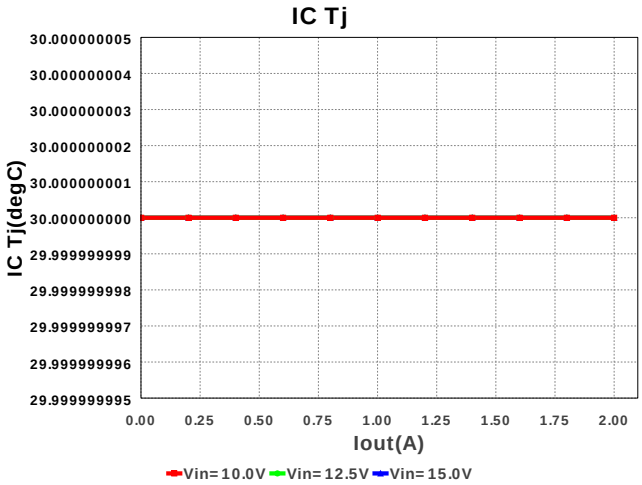

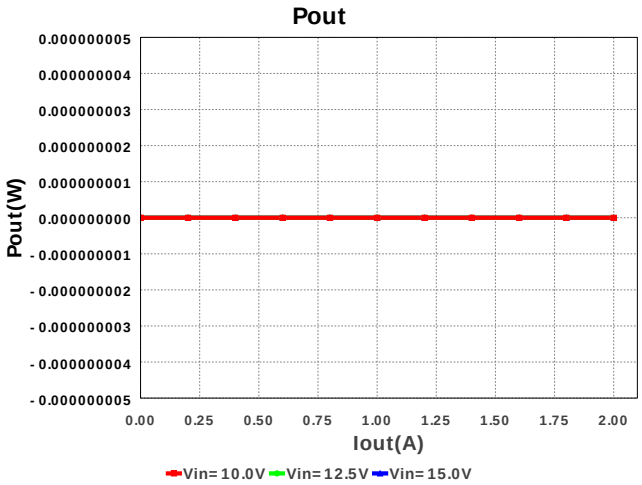

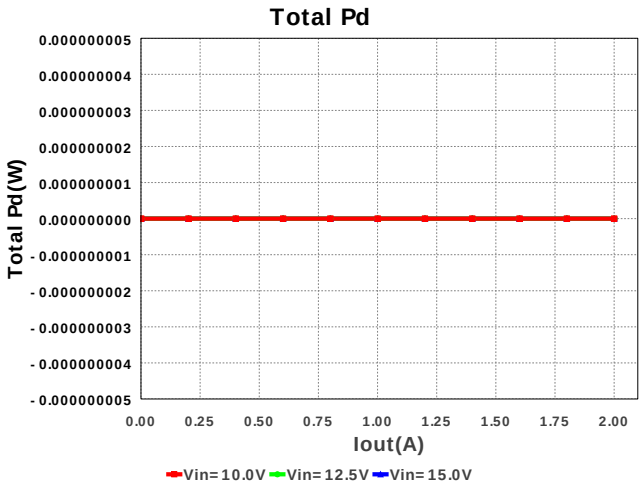

工作数值

#	名称	数值	类别	说明
1.	Cin IRMS	953.021 mA	Current	输入电容器均方根纹波电流
2.	Cout IRMS	348.167 mA	Current	输出电容器均方根纹波电流
3.	IC Ipk	2.603 A	Current	电路内的峰值开关电流
4.	Iin Avg	716.46 mA	Current	平均输入电流
5.	L Ipp	1.206 A	Current	峰值到峰值电感器纹波电流
6.	M1 Irms	1.181 A	Current	Q Iavg
7.	BOM 数量	11	General	Total Design BOM count
8.	大小	203.0 mm2	General	BOM组件的总所占面积
9.	频率	614.875 kHz	General	开关频率
10.	IC Tolerance	7.6 mV	General	IC Feedback Tolerance
11.	M Vds Act	106.268 mV	General	Voltage drop across the MosFET

Copyright © 2013, Texas Instruments Incorporated

#	名称	数值	类别	说明
12.	模式	CCM	General	传导模式
13.	Pout	10.0 W	General	总输出功率
14.	总 BOM	$3.83	General	Total BOM Cost
15.	Vout OP	5.0 V	Op_Point	Operational Output Voltage
16.	占空比	34.855 %	Op_point	占空比
17.	效率	93.049 %	Op_point	稳态效率
18.	IC Tj	53.79 degC	Op_point	电路接点温度
19.	ICThetaJA	41.4 degC/W	Op_point	电路接点到环境热敏电阻
20.	IOUT_OP	2.0 A	Op_point	Iout 操作点
21.	VIN_OP	15.0 V	Op_point	Vin操作点
22.	Vout p-p	13.557 mV	Op_point	峰值到峰值输出纹波电压
23.	Cin Pd	2.089 mW	Power	输入电容器功率耗散
24.	Cout Pd	242.441 µW	Power	输出电容器功率耗散
25.	电路静态电流功率耗散	9.75 mW	Power	电路静态电流功率耗散
26.	IC Pd	574.638 mW	Power	电路功率耗散
27.	L Pd	170.0 mW	Power	电感器功率耗散
28.	M1 PdCond	125.477 mW	Power	M1 MOSFET 开关损耗
29.	M1 PdSw	50.308 mW	Power	M1 MOSFET 开关损耗
30.	M1 PdCond	156.348 mW	Power	M2 MOSFET 开关损耗
31.	整体 Pd	747.017 mW	Power	总功率耗散
32.	M2 Pbody	184.462 mW	Unknown	较低功率FET的功率耗散

设计输入

#	名称	数值	说明
1.	输出电流	2.0 A	最大输出电流
2.	Iout1	2.0 Amps	Output Current #1
3.	Vin 最大	15.0 V	最高输入电压
4.	Vin 最小	10.0 V	最低输入电压
5.	输出电压:	5.0 V	输出电压
6.	Vout1	5.0 Volt	Output Voltage #1
7.	base_pn	TPS54394	美国国家半导体的产品编号
8.	源	DC	输入源类别
9.	工作环境温度	30.0 degC	环境温度

设计协助

1. TPS54394/1 Product Folder : http://www.ti.com/product/tps54394 : contains the data sheet and other resources.

Texas Instruments' WEBENCH simulation tools attempt to recreate the performance of a substantially equivalent physical implementation of the design. Simulations are created using Texas Instruments' published specifications as well as the published specifications of other device manufacturers. While Texas Instruments does update this information periodically, this information may not be current at the time the simulation is built. Texas Instruments does not warrant the accuracy or completeness of the specifications or any information contained therein. Texas Instruments does not warrant that any designs or recommended parts will meet the specifications you entered, will be suitable for your application or fit for any particular purpose, or will operate as shown in the simulation in a physical implementation. Texas Instruments does not warrant that the designs are production worthy.

You should completely validate and test your design implementation to confirm the system functionality for your application prior to production.

Use of Texas Instruments' WEBENCH simulation tools is subject to Texas Instruments' Site Terms and Conditions of Use. Prototype boards based on WEBENCH created designs are provided AS IS without warranty of any kind for evaluation and testing purposes and are subject to the terms of the Evaluation License Agreement.