WEBENCH® 设计报告

VinMin = 30.0V
VinMax = 60.0V
Vout = 60.0V
Iout = 8.0A

Device = LM5069MM-2/NOPB
Topology = Hotswap
创建 = 5/16/13 5:07:47 AM
BOM成本 = $3.17
Total Pd = 0.77W
大小 = 320.0mm2
BOM 数量 = 12

Design : 3728439/31 LM5069MM-2/NOPB
LM5069MM-2/NOPB 30.0V-60.0V to 59.913089757866665V @ 8.0A

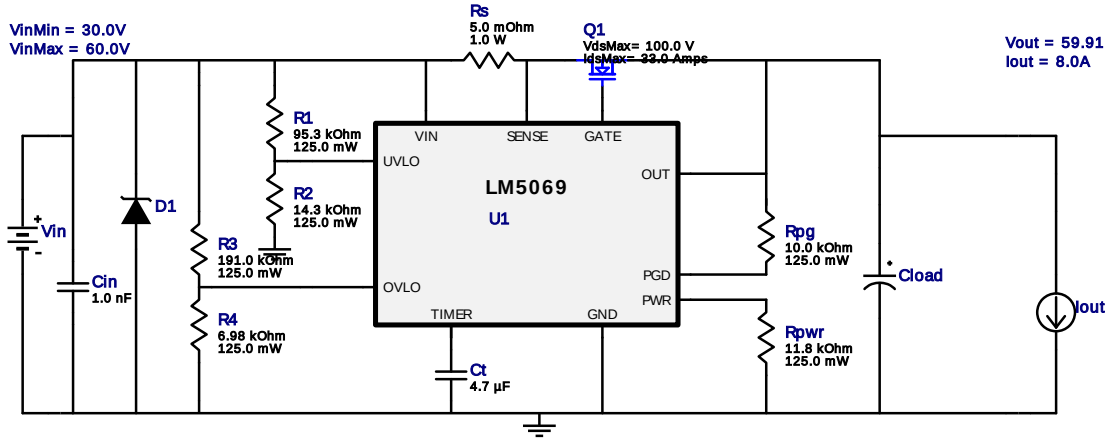

电气材料清单

#	名称	制造商	零件编号	属性	Qty	Price	大小
1.	Cin	MuRata	GRM155R72A102KA01D Series= X7R	Cap= 1.0 nF VDC= 100.0 V IRMS= 0.0 A	1	$0.01	0402 8mm2
2.	Ct	MuRata	GRM219R61C475KE15D Series= X5R	Cap= 4.7 µF VDC= 16.0 V IRMS= 0.0 A	1	$0.04	0805 13mm2
3.	D1	Littelfuse	5.0SMDJ70A	Zener	1	$0.85	SMC 83mm2
4.	Q1	International Rectifier	IRF540NLPBF	VdsMax= 100.0 V IdsMax= 33.0 Amps	1	$0.83	TO-262 85mm2
5.	R1	Vishay-Dale	CRCW080595K3FKEA Series= CRCW..e3	Res= 95.3 kOhm Power= 125.0 mW Tolerance= 1.0%	1	$0.01	0805 13mm2
6.	R2	Vishay-Dale	CRCW080514K3FKEA Series= CRCW..e3	Res= 14.3 kOhm Power= 125.0 mW Tolerance= 1.0%	1	$0.01	0805 13mm2
7.	R3	Vishay-Dale	CRCW0805191KFKEA Series= CRCW..e3	Res= 191.0 kOhm Power= 125.0 mW Tolerance= 1.0%	1	$0.01	0805 13mm2
8.	R4	Vishay-Dale	CRCW08056K98FKEA Series= CRCW..e3	Res= 6.98 kOhm Power= 125.0 mW Tolerance= 1.0%	1	$0.01	0805 13mm2
9.	Rpg	Vishay-Dale	CRCW080510K0FKEA Series= CRCW..e3	Res= 10.0 kOhm Power= 125.0 mW Tolerance= 1.0%	1	$0.01	0805 13mm2
10.	Rpwr	Vishay-Dale	CRCW080511K8FKEA Series= CRCW..e3	Res= 11.8 kOhm Power= 125.0 mW Tolerance= 1.0%	1	$0.01	0805 13mm2
11.	Rs	Susumu Co Ltd	PRL1632-R005-F-T1 Series= 237	Res= 5.0 mOhm Power= 1.0 W Tolerance= 1.0%	1	$0.19	1206 19mm2

Copyright © 2013, Texas Instruments Incorporated

#	名称	制造商	零件编号	属性	Qty	Price	大小
12.	U1	Texas Instruments	LM5069MM-2/NOPB	Switcher	1	$1.19	MUB10A 34mm2

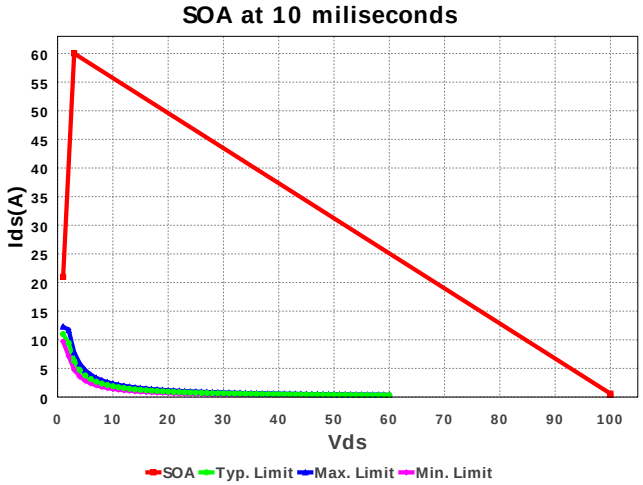

工作数值

#	名称	数值	类别	说明
1.	BOM 数量	12	General	Total Design BOM count
2.	大小	320.0 mm2	General	BOM组件的总所占面积
3.	Pout	479.305 W	General	总输出功率
4.	总 BOM	$3.17	General	Total BOM Cost
5.	Vout OP	59.913 V	Op_Point	Operational Output Voltage
6.	效率	99.839 %	Op_point	稳态效率
7.	IOUT_OP	8.0 A	Op_point	Iout 操作点
8.	Ilimit Max Act	12.3 A	Op_point	Calculated maximum current limit
9.	Ilimit Min Act	9.7 A	Op_point	Calculated minimum current limit
10.	Ilimit Typ Act	11.0 A	Op_point	Calculated typical current limit
11.	Lower OVLO	66.899 V	Op_point	Lower OVLO (Overvoltage-Lockout) threshold
12.	Lower UVLO	19.161 V	Op_point	Lower UVLO (Undervoltage-Lockout) threshold
13.	Max FET Plim	23.411 W	Op_point	Resulting Max FET Power Limit
14.	Min FET Plim	14.349 W	Op_point	Resulting Min FET Power Limit
15.	T_insert	3.406 s	Op_point	Typical Insertion Time
16.	T_start	44.18 s	Op_point	Typical Restart Time
17.	Typical FET Plim	18.88 W	Op_point	Resulting Typical FET Power Limit
18.	Upper OVLO	70.91 V	Op_point	Upper OVLO (Overvoltage-Lockout) threshold
19.	Upper UVLO	21.162 V	Op_point	Upper UVLO (Undervoltage-Lockout) threshold
20.	VIN_OP	60.0 V	Op_point	Vin操作点
21.	FET Pd	375.282 mW	Power	FET Power Dissipation
22.	整体 Pd	773.282 mW	Power	总功率耗散
23.	Fault time	117.991 ms	Unknown	Fault Time

设计输入

#	名称	数值	说明
1.	输出电流	8.0 A	最大输出电流
2.	输出电流	8.0 A	最大输出电流
3.	Iout1	8.0 Amps	Output Current #1
4.	OVLO	20.0 V	OVLO nominal
5.	UVLO	20.0 V	UVLO nominal
6.	Vin 最大	60.0 V	最高输入电压
7.	Vin 最小	30.0 V	最低输入电压
8.	输出电压:	59.913 V	输出电压
9.	Vout1	59.913 Volt	Output Voltage #1
10.	base_pn	LM5069	美国国家半导体的产品编号
11.	currentLimit	10.0 A	Current limit
12.	outputLoadCapacitance	470.0 uF	Output Load capacitance
13.	源	DC	输入源类别
14.	工作环境温度	40.0 degC	环境温度

设计协助

Copyright © 2013, Texas Instruments Incorporated

1. The LM5069 Webench Designer provides the design engineer with a fully functional HotSwap schematic for the positive voltage system.The created design calculates a complete BOM and the total cost of the BOM. Also, the Webench designer offers simulation to emulate the behavior of the device such as Power Sequence, Restart Sequence and Input Transients. To learn more about HotSwap devices and its applications, please refer to the following link: http://www.ti.com/analog/docs/analogtechdoc_hh.tsp?viewType=mostuseful&techDoc=1&rootFamilyId=64&familyId=420&docCategoryId=1&Input3=Go

2. LM5069 Product Folder : http://www.ti.com/product/LM5069 : contains the data sheet and other resources.

Texas Instruments' WEBENCH simulation tools attempt to recreate the performance of a substantially equivalent physical implementation of the design. Simulations are created using Texas Instruments' published specifications as well as the published specifications of other device manufacturers. While Texas Instruments does update this information periodically, this information may not be current at the time the simulation is built. Texas Instruments does not warrant the accuracy or completeness of the specifications or any information contained therein. Texas Instruments does not warrant that any designs or recommended parts will meet the specifications you entered, will be suitable for your application or fit for any particular purpose, or will operate as shown in the simulation in a physical implementation. Texas Instruments does not warrant that the designs are production worthy.

You should completely validate and test your design implementation to confirm the system functionality for your application prior to production.

Use of Texas Instruments' WEBENCH simulation tools is subject to Texas Instruments' Site Terms and Conditions of Use. Prototype boards based on WEBENCH created designs are provided AS IS without warranty of any kind for evaluation and testing purposes and are subject to the terms of the Evaluation License Agreement.