Differential Amplifier

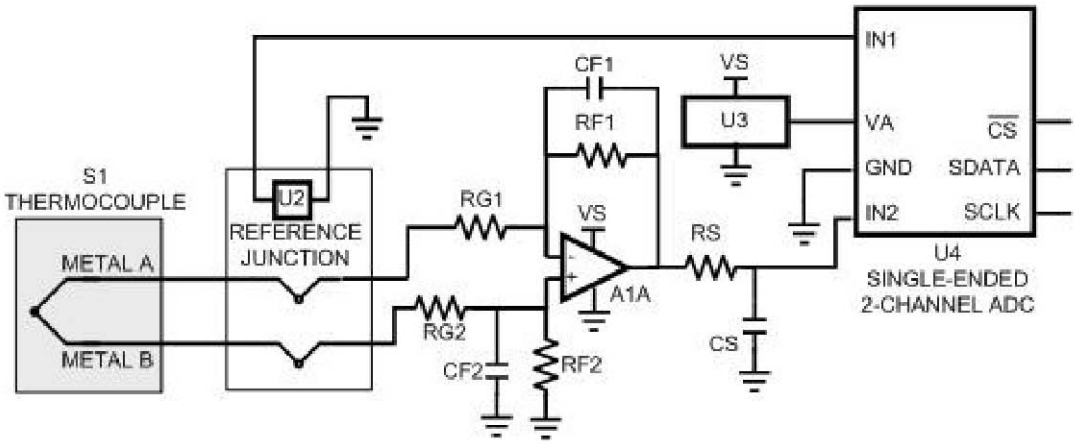

选用的传感器

热电耦	类型	J
合金	Iron vs. Constantan	
工作温度范围	-210C to 1200C	
平均敏感度		

系统数值

电阻器公差	0.1	%
滤波频宽	1000	Hz
通往ADC的全程信号	4.096	V
Vcc	5	V
最低感应温度	200	degC
最高感应温度	1050	degC
参考温度	25	degC

材料清单(BOM)

组件	数值	零件编号	制造商
A1A	Vos=0.025mV, GBW=3MHz	LMP2012MM	Texas Instruments
Board	Noninverting and Difference Am	SP1202S02RB-PCB	Texas Instruments
CF1	0.0013 uF	GRM2165C1H132JA01D	MuRata
CF2	0.0013 uF	GRM2165C1H132JA01D	MuRata
CS	330 pF	C1005C0G1H331J	TDK
RF1	130000 ohms	RG1608P-134-B-T5	Susumu Co Ltd
RF2	130000 ohms	RG1608P-134-B-T5	Susumu Co Ltd
RG1	2000 ohms	RG1608P-202-B-T5	Susumu Co Ltd
RG2	2000 ohms	RG1608P-202-B-T5	Susumu Co Ltd
RS	10.0 ohms	RG1608P-470-B-T5	Susumu Co Ltd
S1		TCP1JG060AP0	Tempco
U2	-5.5 to -13.6 mV/°C	LM94022QBIMG	Texas Instruments
U3	4.096V	LM4120AIM5-4.1	Texas Instruments
U4	10 bits, INL=0.2LSB	ADC102S051CIMM	Texas Instruments

Circuit Operating Values

Circuit gain, realized	65.00	V/V
Circuit Gain, ideal	68.92	V/V
Gain Error	-5.69	%
Amplifier Applied Input Range	0.00 to 0.05	V
Level Shift Voltage	0.0000	V
ADC Applied Input Range	0.610 to 3.862	V
Min. ADC Code	152.6	
IC Cost, US$		

Power Requirements

Vcc	5.00	V
IC Power Dissipation	14.60	mW

Detailed Error Results

Calibratable Circuit Error, 25C	29.72	mVrms
Initial Error (Vos)	1,625.00	uV
Initial Error (Ios)	0.00	uV
Initial Error (Ibias)	0.00	uV
Initial Error (Thermocouple)	29,684.02	uV
Circuit Error after system cal.	4.13	mVrms
Circuit error over temp	0.01	mVrms
Error (Vos over temp)	19.50	uV
Error (Ibias over temp)	0.00	uV
Error (Ios over temp)	0.00	uV
Error (PSRR)	0.16	uV
ADC resolution limit, from INL or LSB	4,030.73	uV
Total output noise	0.10	mVrms
Circuit output noise	0.10	mVrms
Noise density of Rf	46.24	nV/rtHz
Rg Noise Density	5.73	nv/rtHz

Notes

无需电平位移：温度范围属单极性