Main Power Input

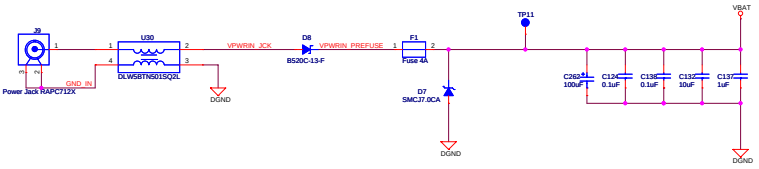

Power Management IC

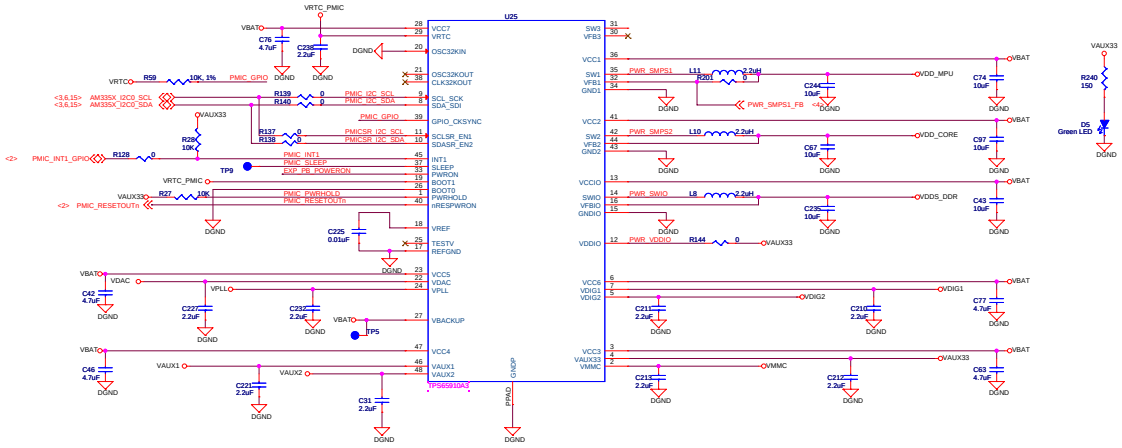

RTC LDO

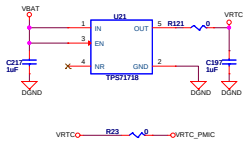

PWR ON SWITCH

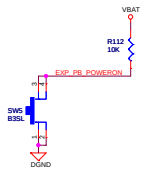

<Variant Name>

ARM MPU

Texas Instruments, Inc.
ARM MPU Business Unit
12500 TI Blvd
Dallas, TX 75243

TEXAS INSTRUMENTS

TMDSSK3358

Platform_Power

Size	Document Number	Modified By:	Rev
C	TMDSSK3358_1.2A.dsn	Radha	1.2A

Date: Friday, August 10, 2012 | Sheet 5 of 17