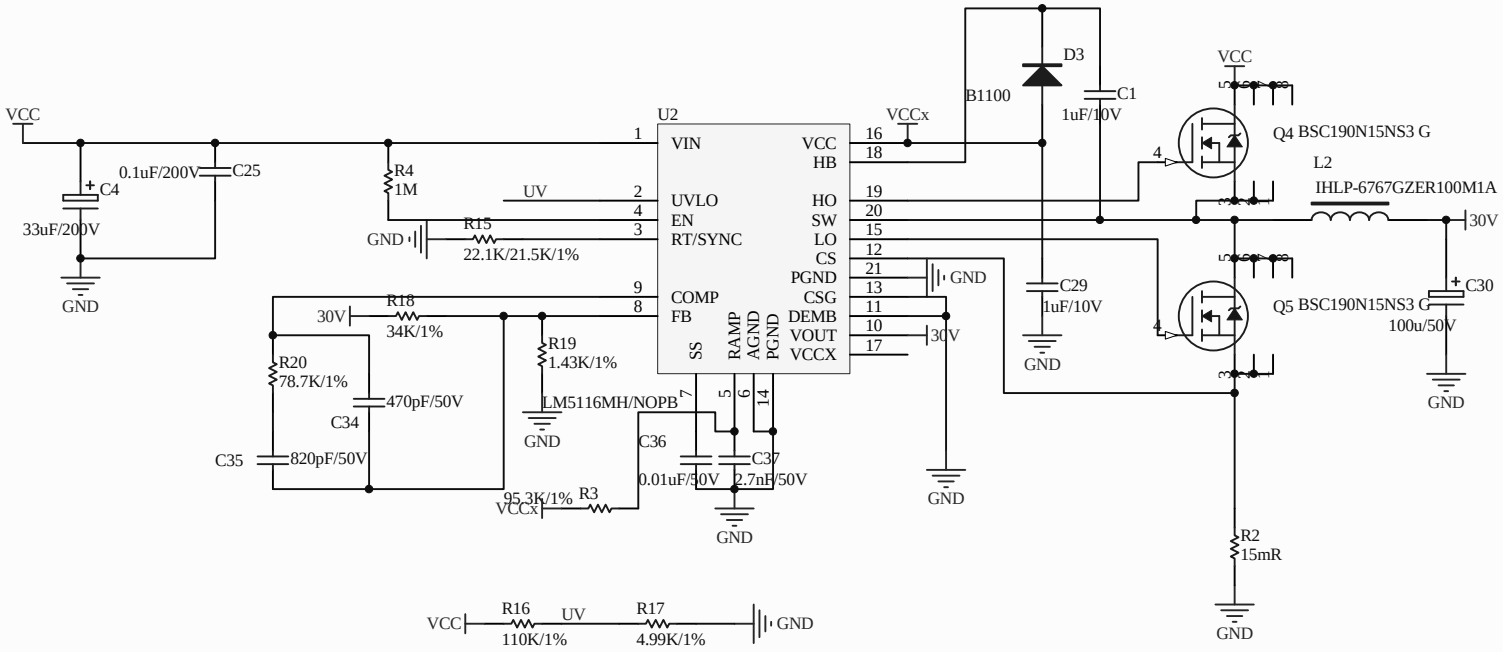

Title		
Size A4	Number	Revision
Date: 2014/4/23		Sheet of
File: E:\projects\..\Sheet1.SchDoc		Drawn By: